PROLEUM

FORWARD THINKING SOLUTIONS

PIPE SUPPORTS FOR ALL INDUSTRIES
PROUDLY MANUFACTURED IN AUSTRALIA

PROLEUM

FORWARD THINKING SOLUTIONS

Pipe Supports for All Industries

MINPROVISE International is an Australian owned and operated company specialising in integrated services for the oil and gas, energy and resources markets.

Through our Brand "**PROLEUM**" we engineer and manufacture pipe supports for a full range of applications, including LNG, Refining, Power Generation and Water.

The **PROLEUM** brand works within the accreditations ISO 9001, ISO 14001, OHSAS18001 and AS/NZS4801 maintained and held by **MINPROVISE**.

MINPROVISE is committed to delivery with the highest safety, quality and environmental standards to ensure productivity, innovation and workmanship.

> “We pride ourselves on fast turnaround deliveries for outages and shutdown situations.”

In addition to our standard designed pipe supports we manufacture to client specific designs and details, from cryogenic requirements to super heated steam. We can source and fabricate from a large range of exotic materials and supply a full range of insulation materials for hot and cold applications.

PROLEUM
FORWARD THINKING SOLUTIONS

TABLE OF CONTENTS

MANAGEMENT SYSTEM CERTIFICATE **P 6**

PIPE SUPPORT - SPECIFICATION AND STANDARDS **P 10**

SECTION A **P 12**

LIGHT DUTY PIPE CLAMP: PRO-LC 15-600 P 13
MEDIUM DUTY PIPE CLAMP: PRO-MC 15-600 P 14
HEAVY DUTY 2 BOLT CLAMP: PRO-HC 40-900 P 15
INSULATED CLAMP: PRO-IC /T1 15-500 P 16
INSULATED CLAMP: PRO-IC /T2 15-350 P 17

SECTION B **P 18**

LIGHT DUTY PIPE CLAMP: PRO-LC3 15-600 P 19
MEDIUM DUTY 3 BOLT CLAMP: PRO-MC3 15-600 P 20
HEAVY DUTY 3 BOLT CLAMP: PRO-HC3 150-900 P 21
HIGH TEMPERATURE 3 BOLT CLAMP: PRO-HTC3 15-600 P 22
INSULATED 3 BOLT CLAMP: PRO-IC3/ T1 15-600 P 23
INSULATED 3 BOLT CLAMP: PRO-IC3/ T2 15-350 P 24

SECTION C **P 25**

PIPE WELDED LUG: PRO-PWL - RANGE UP TO 28.8T P 26
WELDED LUG: PRO-WL - RANGE UP TO 28.5T P 27
WELD TO BEAM ATTACHMENT: PRO-WBA/ T1 - RANGE UP TO 15T P 28
WELD TO BEAM ATTACHMENT: PRO-WBA/ T2 - RANGE UP TO 15T P 29
HEMISPHERICAL WASHER: PRO-HW - RANGE M6 TO M80 P 30
HEMISPHERICAL CUP: PRO-HC P 30
PLATE WASHER: PRO-PW - RANGE M10 TO M64 P 31
STANDARD TRAPEZE BEAM: PRO-STB P 32

SECTION D **P 33**

HANGER CLAMP: PRO-HC - RANGE 15 TO 600 P 34
BEAM HANGER: PRO-BH - RANGE M12 TO M48 P 35

SECTION E **P 36**

STANDARD SHOE STOP ATTACHMENT: PRO-SS P 37
STANDARD PIPE GUIDE: PRO-PG - RANGE UP TO 750NB P 38
STANDARD SHOE GUIDE: PRO-SG P 39
HEAVY DUTY GUIDE: PRO-HDG P 40

SECTION F **P 41**

WELDED PIPE SHOE: PRO-WPS - RANGE 25 TO 750 P 43
STANDARD CLAMP SHOE: PRO-CPS - RANGE 25 TO 700 P 44
INSULATED PIPE SHOE: PRO-IS/ T1 P 45
INSULATED PIPE SHOE: PRO-IS/ T2 P 46
SLIDE PLATES: PRO-SP P 47
ADJUSTABLE PIPE STANDS: PRO-APS/ T1 OR T2 P 48

SECTION G **P 49**
RISER CLAMP STANDARD: PRO-RC/ 250 P 50
RISER CLAMP STANDARD: PRO-RC/ 460 P 51

SECTION H **P 52**
SADDLE GUIDE: PRO-SG P 53
SADDLE CLAMP: PRO-SC P 54
INSULATED PIPE SADDLE: PRO-IS/ T1 P 55
INSULATED PIPE SADDLE: PRO-IS/ T2 P 56
INSULATED PIPE SADDLE: PRO-IS/ T3 P 57

SECTION J **P 58**
ALL-THREAD ROD: PRO-AT P 59
THREADED DROP-ROD: PRO-DR P 60
FORGED EYENUT: PRO-FE P 61
WELDED SPADE END AND ROD: PRO-WS P 62
ROD CONNECTOR: PRO-RC P 63
FORGED CLEVIS AND PIN: PRO-FC P 64
FORGED TURNBUCKLE: PRO-TB P 65
SPADE END CONNECTOR: PRO-SEC P 66

SECTION K **P 67**
STANDARD U-BOLT GUIDE: PRO-UBG P 68
STANDARD U-BOLT CLAMP: PRO-UBC P 69
INSULATED U-BOLT CLAMP: PRO-IUC/ T1 P 70
INSULATED U-BOLT CLAMP: PRO-IUC/ T2 P 71
INSULATED U-BOLT GUIDE: PRO-IUG/ T1 P 72
INSULATED U-BOLT GUIDE: PRO-IUG/ T2 P 73
INSULATED U-BOLT GUIDE WITH TEFLON: PRO-IUG/ T3 P 74
INSULATED U-BOLT GUIDE WITH TEFLON: PRO-IUG/ T4 P 75

SECTION L **P 76**
INTRODUCTION P 77
CRYOGENIC PIPE SHOE: PRO-CPS P 79
STANDARD COLD SHOE: PRO-CS P 80
INSULATED TRUNNION SUPPORT: PRO-IT P 81

SECTION M **P 82**
VARIABLE LOAD SPRING SUPPORTS P 83
TYPE A, B P 84
TYPE C, F P 84
TYPE G P 84

DNV·GL

MANAGEMENT SYSTEM CERTIFICATE

Certificate No:	Initial certification date:	Valid:
288828-2019-AHSO-AUS-JAS-ANZ	03, June, 2013	03, June, 2019 - 03, June, 2022

This is to certify that the management system of

Minprovise International Pty Ltd

13 Stott Road, Welshpool, WA 6106 Australia
Unit 54, 1048 Beaudesert Road, Coopers Plains QLD 4108 Australia

has been found to conform to Safety Management System standard:

AS/NZS 4801:2001

This certificate is valid for the following scope:

Supply of equipment, maintenance, fabrication, assembly, design and engineering services to the mining, oil & gas, marine and construction industries.

Place and date:
Sydney, 31 May 2019

JAS-ANZ

For the issuing office:
DNV-GL Business Assurance
Level 7, 124 Walker Street
North Sydney NSW 2060
Australia

Yngve Amundsen
Management Representative

Accreditation by the Joint Accreditation System of Australia and New Zealand, Acc O 1870399
Lack of fulfilment of conditions as set out in the Certification Agreement may render this Certificate invalid. Refer to appendix for current certificate site address.
URL:www.jas-anz.org/register
ACCREDITED UNIT: DNV GL Business Assurance Australia Pty Limited., Level 7, 124 Walker Street, North Sydney NSW 2060, Australia.
TEL:+61 299 00 9500. www.dnvba.com.au

DNV·GL

MANAGEMENT SYSTEM CERTIFICATE

Certificate No:	Initial certification date:	Valid:
288827-2019-AQ-AUS-JAS-ANZ	03, June, 2013	03, June, 2019 - 03, June, 2022

This is to certify that the management system of

Minprovise International Pty Ltd

13 Stott Road, Welshpool, WA 6106 Australia
Unit 54, 1048 Beaudesert Road, Coopers Plains QLD 4108 Australia

has been found to conform to the Quality Management System standard:

ISO 9001:2015

This certificate is valid for the following scope:

Supply of equipment, maintenance, fabrication, assembly, design and engineering services to the mining, oil & gas, marine and construction industries.

Place and date:
Sydney, 31 May 2019

JAS-ANZ

For the issuing office:
DNV-GL Business Assurance
Level 7, 124 Walker Street
North Sydney NSW 2060
Australia

Yngve Amundsen
Management Representative

DNV·GL

MANAGEMENT SYSTEM CERTIFICATE

Certificate No:	Initial certification date:	Valid:
288826-2019-AE-AUS-JAS-ANZ	03, June, 2013	03, June, 2019 - 03, June, 2022

This is to certify that the management system of

Minprovise International Pty Ltd

13 Stott Road, Welshpool, WA 6106 Australia
Unit 54, 1048 Beaudesert Road, Coopers Plains QLD 4108 Australia

has been found to conform to the Environmental Management System standard:

ISO 14001:2015

This certificate is valid for the following scope:

Supply of equipment, maintenance, fabrication, assembly, design and engineering services to the mining, oil & gas, marine and construction industries.

Place and date:
Sydney, 31 May 2019

JAS-ANZ

For the issuing office:
DNV-GL Business Assurance
Level 7, 124 Walker Street
North Sydney NSW 2060
Australia

Yngve Amundsen
Management Representative

DNV·GL

MANAGEMENT SYSTEM CERTIFICATE

Certificate No:	Initial certification date:	Valid:
288829-2019-AE-AUS-JAS-ANZ	03, June, 2013	03, June, 2019 - 13, March, 2021

This is to certify that the management system of

Minprovise International Pty Ltd

13 Stott Road, Welshpool, WA 6106 Australia
Unit 54, 1048 Beaudesert Road, Coopers Plains QLD 4108 Australia

has been found to conform to the Occupational Health and Safety Management System standard:

OHSAS 18001:2007

This certificate is valid for the following scope:

Supply of equipment, maintenance, fabrication, assembly, design and engineering services to the mining, oil & gas, marine and construction industries.

Place and date:
Sydney, 31 May 2019

JAS-ANZ

For the issuing office:
DNV-GL Business Assurance
Level 7, 124 Walker Street
North Sydney NSW 2060
Australia

Yngve Amundsen
Management Representative

Accreditation by the Joint Accreditation System of Australia and New Zealand, Acc O 1870399
Lack of fulfilment of conditions as set out in the Certification Agreement may render this Certificate invalid. Refer to appendix for current certificate site address.
URL:www.jas-anz.org/register
ACCREDITED UNIT: DNV GL Business Assurance Australia Pty Limited., Level 7, 124 Walker Street, North Sydney NSW 2060, Australia.
TEL:+61 299 00 9500. www.dnvba.com.au

PIPE SUPPORT - SPECIFICATION AND STANDARDS

1. SCOPE

PROLEUM design and manufacture pipe supports to the following standards:

- American Standard MSS-SP-58 Pipe Hangers and Supports
- ASME B31.1 Power Piping
- ASME B31.3 Process Piping
- British Standard BS3974 Parts I, II and III Pipe Supports
- Australian Standards AS4100, AS4041, AS1554

2. ABBREVIATIONS

- **BOP:** Bottom of Pipe
- **HDG:** Hot Dip Galvanised
- **AS:** Australian Standard
- **BS:** British Standard
- **MSS:** Manufacturers Standardization Society (US)
- **AMSE:** The American Society of Mechanical Engineers
- **NB:** Nominal Bore
- **OD:** Outside Diameter
- **D:** Diameter
- **L:** Length
- **W:** Width
- **T:** Thickness

3. MATERIALS

3.1 The preferred materials and surface finishes from which the components of pipe support assemblies shall be manufactured are given in **Table 1.0** and **1.1**.

TABLE 1.0 SCHEDULE OF COMPONENT MATERIAL		
Component	**Material**	**Standards**
Pipe Clamps, Saddles, Riser Supports and Line Stops	Carbon Steel	AS3678 Gr.250
	Boiler Plate	AS1548-7-460R
	Alloy Steel	ASTM A387 Gr.22
	Stainless Steel	ASTM A240 Gr.316
	Stainless Steel	ASTM A240 Gr.304
U Bolts	Carbon Steel	Class 4.6 DIN 975
	Stainless Steel	ASTM A240 Gr.316
All Thread Rods	Carbon Steel	Class 4.6 DIN 975
Load Pins & Threaded Rod	Carbon Steel	AS3679 Gr.300
Clamp Bolts and Load Bolts	Carbon Steel	AS1111 Gr. 4.6
	Carbon Steel	AS1111 Gr.8.8
	Alloy Steel	ASTM A 193 B16
	Stainless Steel	Gr.316 DIN 931
Nuts	Carbon Steel	AS1112.1 Class 5
	Carbon Steel	AS1112.1 Class 8
	Alloy Steel	ASTM A 194 Gr.4
	Stainless Steel	Gr.316 DIN 975
Forgings	Forged Steel	ASTM A 29 C1035
Spacers	Carbon Steel	AS1074 Medium or Heavy

TABLE 1.1 SCHEDULE OF COMPONENT SURFACE FINISHES	
Surface Finish	Standards
Hot Dip Galvanise	AS/NZS 4680
Zinc Plating	AS1789 - 2003

SECTION A

2 BOLT CLAMP

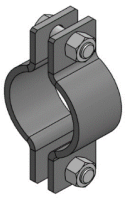

LIGHT DUTY PIPE CLAMP: PRO-LC 15-600 P 13

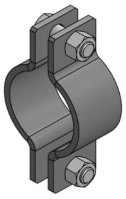

MEDIUM DUTY PIPE CLAMP: PRO-MC 15-600 P 14

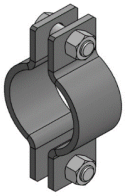

HEAVY DUTY 2 BOLT CLAMP: PRO-HC 40-900 P 15

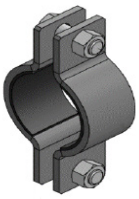

INSULATED CLAMP: PRO-IC /T1 15-500
For Stainless,Duplex or Super Duplex P 16

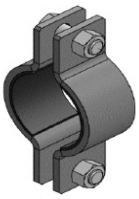

INSULATED CLAMP: PRO-IC /T2 15-350
For Copper Nickel Cu/Ni Pipes P 17

LIGHT DUTY PIPE CLAMP: PRO-LC 15-600

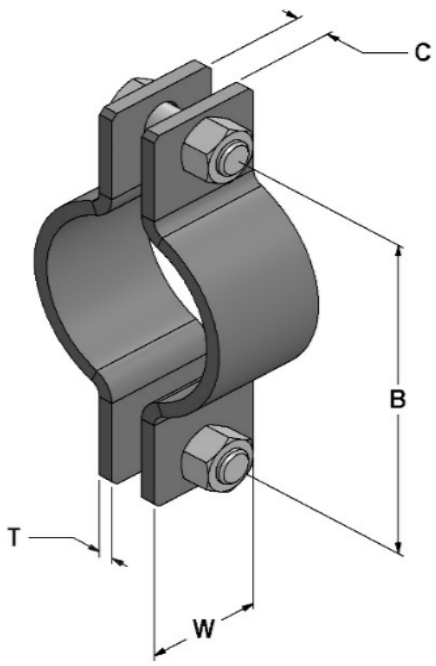

Nominal Size	Outside ø	W	T	B	C	Bolt Size
15	21.3	25	3	55	6	M6
20	26.9	25	3	65	6	M6
25	33.7	25	3	70	6	M6
32	42.4	32	3	90	10	M10
40	48.3	32	3	100	10	M10
50	60.3	32	3	110	10	M10
65	76.1	40	3	120	10	M10
80	88.9	40	3	140	10	M10
100	114.3	40	3	160	12	M12
150	168.3	40	5	230	12	M12
200	219.1	50	6	280	16	M16
250	273	50	6	350	16	M16
300	323.9	50	10	420	20	M16
350	355.6	65	10	460	24	M24
400	406.4	65	12	530	24	M24
450	457	75	16	620	24	M24
500	508	75	16	670	24	M24
600	610	75	16	780	24	M24

NOTES	
Material	Carbon Steel Gr.250
Standard finish	Hot Dip Galvanised for Carbon Steel. Mill for Stainless Steel
	All fasteners supplied as Gr.4.6
	Spacers and lock nuts supplied on request

MEDIUM DUTY PIPE CLAMP: PRO-MC 15-600

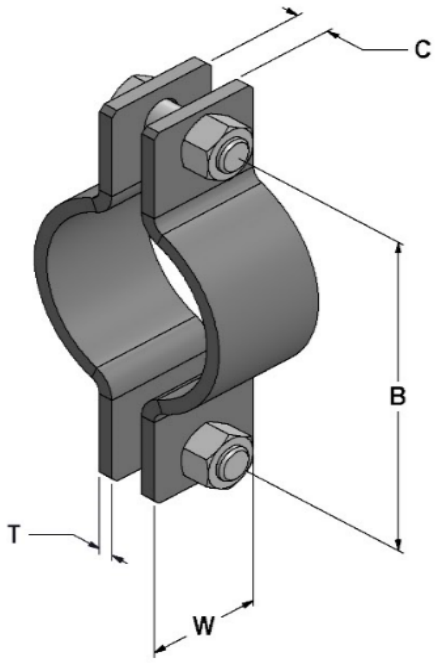

Pipe NB	Pipe OD	W	T	B	C	Bolt Size
15	21.3	40	5	65	10	M10
20	26.9	40	5	70	10	M10
25	33.7	40	5	75	10	M10
32	42.4	40	5	90	12	M12
40	48.3	40	5	100	12	M12
50	60.3	40	5	110	12	M12
65	76.1	40	8	160	16	M16
80	88.9	40	8	170	16	M16
100	114.3	40	8	190	16	M16
150	168.3	40	8	250	16	M16
200	219.1	50	10	310	16	M16
250	273	65	10	370	20	M20
300	323.9	65	16	460	24	M24
350	355.6	65	16	500	30	M30
400	406.4	65	20	580	30	M30
450	457	90	20	640	36	M36
500	508	100	25	720	26	M36
600	610	130	25	830	42	M42

NOTES	
Material	Carbon Steel Gr.250
Standard finish	Hot Dip Galvanised for Carbon Steel. Mill for Stainless Steel
	All fasteners supplied as Gr.4.6
	Spacers and lock nuts supplied on request

HEAVY DUTY 2 BOLT CLAMP: PRO-HC 40-900

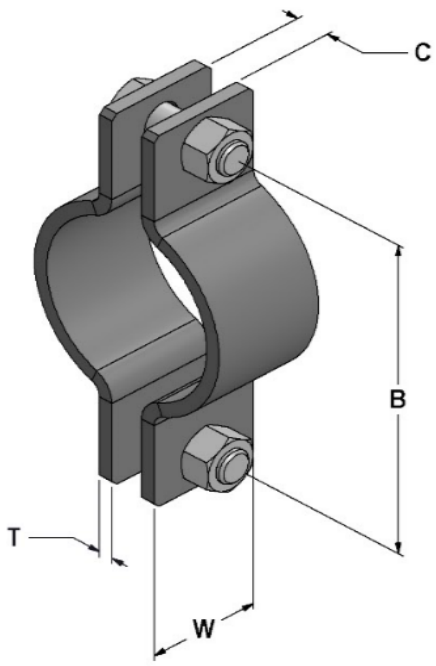

Nominal Size	Outside ø	W	T	B	Bolt Size	C
40	48.3	40	6	100	M12	16
50	60.3	40	6	120	M12	16
65	76.1	40	6	140	M16	20
80	88.9	50	8	160	M20	25
100	114.3	50	10	190	M24	28
150	168.3	65	12	260	M24	28
200	219.1	65	12	310	M24	28
250	273.1	65	16	380	M30	32
300	323.9	75	20	460	M36	40
350	355.6	100	20	500	M36	40
400	406.4	100	20	550	M36	40
450	457.2	150	20	720	1 7/8”	75
500	508	130	25	800	1 7/8”	75
600	609.6	150	25	920	2 1/4”	80
700	711.2	200	25	1020	2 1/4”	80
750	762	175	32	1120	2 1/2”	90
800	812.8	200	32	1180	2 1/2”	90
850	863.6	200	40	1250	2 1/2”	90
900	914.4	200	40	1320	3”	90

NOTES	
Material	Carbon Steel Gr.250
Standard finish	Hot Dip Galvanised for Carbon Steel. Mill for Stainless Steel
	Large clamps 450NB + supplied with stud bolts and double nuts
	HDG suitable for up to 200°C
	Spacers and lock nuts supplied on request

PROsupport

INSULATED CLAMP: PRO-IC /T1 15-500

For Stainless Duplex or Super Duplex Pipes

PROLEUM
FORWARD THINKING SOLUTIONS

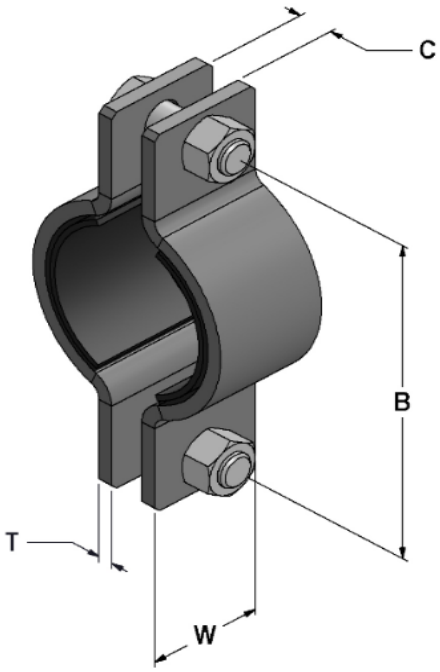

Pipe NB	Pipe OD	W	T	B	Bolt Size	C
15	21.3	40	5	80	M10	10
20	26.9	40	5	85	M10	10
25	33.7	40	5	90	M10	10
32	42.4	40	5	105	M10	10
40	48.3	40	5	110	M10	10
50	60.3	40	5	120	M12	12
65	76.1	40	8	170	M12	16
80	88.9	40	8	180	M12	16
100	114.3	40	8	190	M12	16
150	168.3	40	8	250	M12	16
200	219.1	50	10	300	M16	16
250	273	65	10	380	M20	20
300	323.9	65	16	470	M24	24
350	355.6	65	16	510	M24	30
400	406.4	65	20	580	M30	30
450	457	90	20	650	M30	36
500	508	100	25	730	M36	36
600	610	130	25	845	M42	42

NOTES	
Material	Carbon or Stainless Steel
Insulator	Neoprene compound with self-extinguishing fire retardant
Standard finish	Hot Dip Galvanised for Carbon Steel. Mill for Stainless Steel
	Spacers and lock nuts supplied upon request
	Temperature range -35°C to 100°C

PROsupport
INSULATED CLAMP: PRO-IC /T2 15-350
For Copper Nickel (Cu/Ni) Pipes

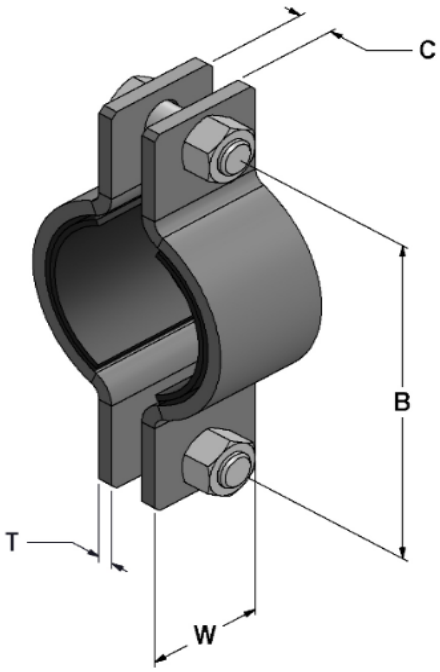

Pipe NB	Pipe OD	W	T	B	Bolt Size	C
15	16	40	5	65	M10	10
20	25	40	5	75	M10	10
25	30	40	5	85	M10	10
32	38	40	5	95	M10	12
40	44.5	40	5	100	M10	12
50	57	40	5	120	M12	12
65	76.1	40	8	160	M12	16
80	88.9	40	8	170	M12	16
100	108	40	8	190	M12	16
150	159	40	8	240	M12	16
200	219.1	50	10	310	M16	16
250	267	65	10	370	M20	20
300	323.9	65	16	460	M24	24
350	368	65	16	510	M30	30

NOTES	
Material	Carbon or Stainless Steel
Insulator	Neoprene compound with self-extinguishing fire retardant
Standard finish	Hot Dip Galvanised for Carbon Steel. Mill for Stainless Steel
	Spacers and lock nuts supplied upon request
	Temperature range -35°C to 100°C

SECTION B

3 BOLT CLAMP

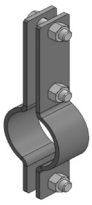

LIGHT DUTY PIPE CLAMP: PRO-LC3 15-600 P 19

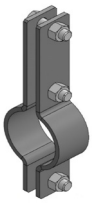

MEDIUM DUTY 3 BOLT CLAMP: PRO-MC3 15-600 P 20

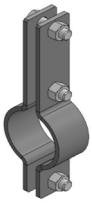

HEAVY DUTY 3 BOLT CLAMP: PRO-HC3 150-900 P 21

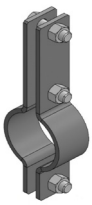

HIGH TEMPERATURE 3 BOLT CLAMP: PRO-HTC3 15-600 P 22

INSULATED 3 BOLT CLAMP: PRO-IC3/ T1 15-600
For Stainless Steel,Duplex or Super Duplex Pipes P 23

INSULATED 3 BOLT CLAMP: PRO-IC3/ T2 15-350
For Copper Nickel Cu/Ni Pipes P 24

LIGHT DUTY PIPE CLAMP: PRO-LC3 15-600

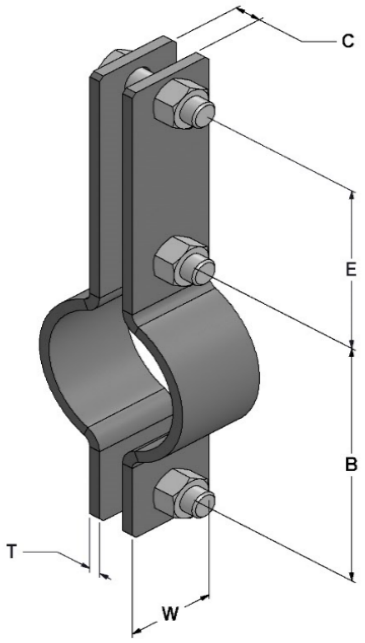

Pipe NB	Pipe OD	W	T	B	E	C	Bolt Size
15	21.3	25	3	65	60	6	M6
20	26.9	25	3	70	60	6	M6
25	33.7	25	3	80	60	6	M6
32	42.4	32	3	90	60	10	M10
40	48.3	32	3	100	60	10	M10
50	60.3	32	3	110	60	10	M10
65	76.1	40	3	160	60	10	M10
80	88.9	40	3	170	60	10	M10
100	114.3	40	3	190	60	12	M12
150	168.3	40	5	250	80	12	M12
200	219.1	50	6	320	90	16	M16
250	273	50	6	390	90	16	M16
300	323.9	50	6	480	90	20	M20
350	355.6	65	10	530	90	24	M24
400	406.4	65	12	600	90	24	M24
450	457	75	16	660	90	24	M24
500	508	75	16	740	90	24	M24
600	610	75	16	880	100	24	M24

NOTES	
Material	Carbon Steel Gr.250
Standard finish	Hot Dip Galvanised or Mill
	All fasteners supplied as Gr.4.6
	Spacers and lock nuts supplied on request

MEDIUM DUTY 3 BOLT CLAMP: PRO-MC3 15-600

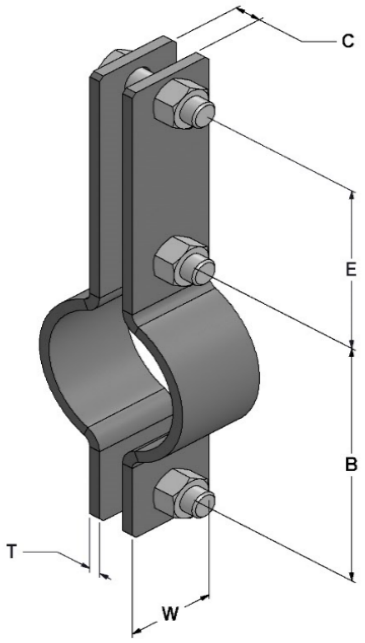

Nominal Size	Outside ø	W	T	B	F	Bolt Size	C
15	21.3	40	5	65	70	M10	10
20	26.9	40	5	70	70	M10	10
25	33.7	40	5	80	70	M10	10
32	42.4	40	5	90	70	M12	12
40	48.3	40	5	100	80	M12	12
50	60.3	40	5	110	80	M12	12
65	76.1	40	8	160	90	M16	16
80	88.9	40	8	170	90	M16	16
100	114.3	40	8	190	90	M16	16
150	168.3	40	8	250	90	M16	16
200	219.1	50	10	320	90	M20	20
250	273	65	16	390	90	M20	20
300	323.9	65	20	480	90	M24	24
350	355.6	65	20	530	90	M30	30
400	406.4	100	25	600	90	M30	30
450	457	100	25	660	90	M36	36
500	508	100	30	740	100	M36	36
600	610	100	35	880	100	M42	42

NOTES	
Material	Carbon Steel Gr.250
Standard finish	Hot Dip Galvanised for Carbon Steel. Mill for Stainless Steel
	All fasteners supplied as Gr.4.6
	Spacers and lock nuts supplied on request

HEAVY DUTY 3 BOLT CLAMP: PRO-HC3 150-900

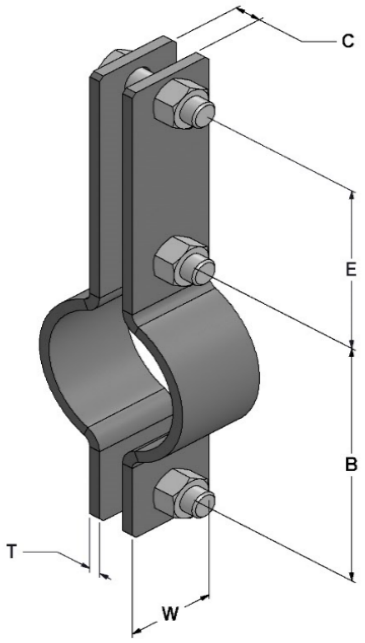

Nominal Size	Outside ø	W	T	B	E	Bolt Size	C
150	168.3	65	10	240	95	M24	45
200	219.1	65	12	300	95	M30	50
250	273.1	90	12	370	95	M30	60
300	323.9	100	16	430	100	M36	65
350	355.6	100	20	480	100	M36	65
400	406.4	130	20	540	105	1 5/8”	75
450	457.2	100	25	630	190	1 7/8”	90
500	508	130	25	680	190	1 7/8”	90
600	609.6	150	25	780	190	1 7/8”	90
700	711.2	200	25	940	210	2 1/4”	100
750	762	200	25	1000	210	2 1/4”	110
800	812.8	200	32	1080	230	2 1/2”	110
850	863.6	200	40	1170	230	2 1/2”	110
900	914.4	200	40	1280	230	2 3/4”	115

NOTES	
Material	Carbon Steel Gr.250
Standard finish	Hot Dip Galvanised for Carbon Steel. Mill for Stainless Steel
	Large clamps 400NB + supplied with stud bolts and double nuts
	HDG suitable for up to 200°C
	Spacers and lock nuts supplied on request

HIGH TEMPERATURE 3 BOLT CLAMP: PRO-HTC3 15-600

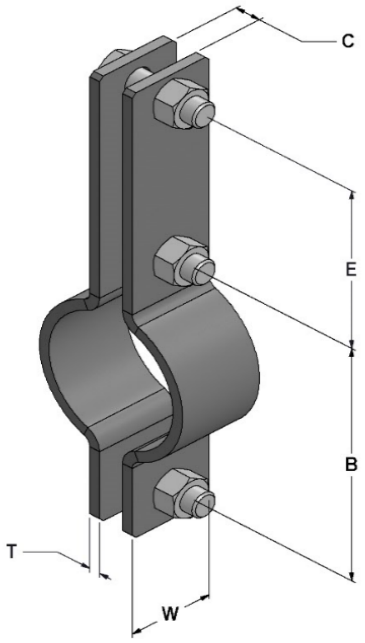

Pipe NB	Pipe OD	W	T	B	E	Bolt Size	C
15	21.3	40	5	65	70	M10	10
20	26.7	40	5	70	70	M10	10
25	33.4	40	8	95	60	M10	10
32	42.2	40	8	100	60	M12	12
40	48.3	40	8	120	75	M12	12
50	60.3	40	8	130	80	M12	12
65	71.6	40	8	160	90	M16	16
80	88.9	40	8	170	95	M16	16
100	114.3	50	10	200	90	M16	16
150	168.3	50	10	260	90	M16	16
200	219.1	65	16	340	80	M20	20
250	273	65	20	420	80	M20	20
300	323.9	100	25	510	65	M24	24
350	355.6	130	25	550	70	M30	30
400	406.4	130	30	630	70	M30	30
450	457.2	130	36	710	85	M36	36
500	508	110	45	820	85	M36	36
600	609.6	130	50	960	95	M42	42

NOTES	
Material	Carbon Steel Gr.460R
Standard finish	Mill only
	All Fasteners Supplied as Gr.4.6
	Spacers and lock nuts supplied on request

PROsupport

INSULATED 3 BOLT CLAMP: PRO-IC3/ T1 15-600

For Stainless, Duplex or Super Duplex Pipes

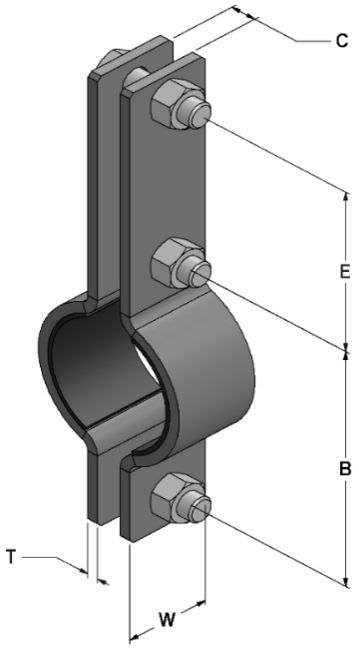

Pipe NB	Pipe OD	W	T	B	E	Bolt Size	C
15	21.3	40	5	65	70	M10	10
20	26.9	40	5	70	70	M10	10
25	33.7	40	5	80	70	M10	10
32	42.4	40	5	90	70	M10	12
40	48.3	40	5	100	85	M10	12
50	60.3	40	5	110	80	M12	12
65	76.1	40	8	160	90	M12	16
80	88.9	40	8	170	95	M12	16
100	114.3	40	8	190	95	M12	16
150	168.3	40	8	250	95	M12	16
200	219.1	50	10	320	95	M16	16
250	273	65	16	390	90	M20	20
300	323.9	65	20	460	75	M24	24
350	355.6	65	20	500	80	M24	30
400	406.4	100	25	580	75	M30	30
450	457	100	25	640	85	M30	36
500	508	100	30	720	85	M36	36
600	610	100	35	830	95	M42	42

NOTES	
Material	Carbon or Stainless Steel
Insulator	Neoprene compound with self-extinguishing fire retardant
Standard finish	Hot Dip Galvanised for Carbon Steel. Mill for Stainless Steel
	Spacers and lock nuts supplied upon request
	Temperature range -35°C to 100°C

PROsupport

INSULATED 3 BOLT CLAMP: PRO-IC3/ T2 15-350

For Copper Nickel Cu/Ni Pipes

PROLEUM
FORWARD THINKING SOLUTIONS

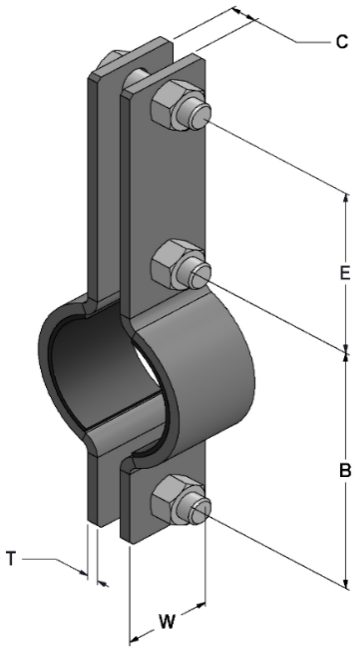

Pipe NB	Pipe OD	W	T	E	B	Bolt Size	C
15	16	40	5	70	60	M10	10
20	25	40	5	70	70	M10	10
25	30	40	5	70	75	M10	10
32	38	40	5	70	85	M10	12
40	44.5	40	5	85	90	M10	12
50	57	40	5	80	100	M12	12
65	76.1	40	8	90	160	M12	16
80	88.9	40	8	95	170	M12	16
100	108	40	8	95	190	M12	16
150	159	40	8	95	240	M12	16
200	219.1	50	10	95	310	M16	20
250	267	65	16	90	390	M20	20
300	323.9	65	20	75	480	M24	24
350	368	65	20	80	540	M30	30

NOTES	
Material	Carbon or Stainless Steel
Insulator	Neoprene compound with self-extinguishing fire retardant
Standard finish	Hot Dip Galvanised for Carbon Steel. Mill for Stainless Steel
	Spacers and lock nuts supplied upon request
	Temperature range -35°C to 100°C

SECTION C

ANCILLIARY COMPONENTS

PIPE WELDED LUG: PRO-PWL - RANGE UP TO 28.8T P 26

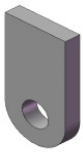

WELDED LUG: PRO-WL - RANGE UP TO 28.5T P 27

WELD TO BEAM ATTACHMENT: PRO-WBA/ T1 - RANGE UP TO 15T P 28

WELD TO BEAM ATTACHMENT: PRO-WBA/ T2 - RANGE UP TO 15T (Complete with Load Pin) P 29

HEMISPHERICAL WASHER: PRO-HW - RANGE M6 TO M80 P 30

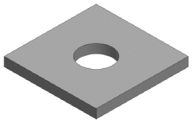

PLATE WASHER: PRO-PW - RANGE M10 TO M64 P 31

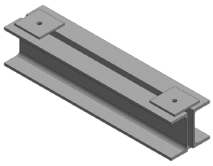

STANDARD TRAPEZE BEAM: PRO-STB P 32

PIPE WELDED LUG: PRO-PWL - Range up to 28.8T

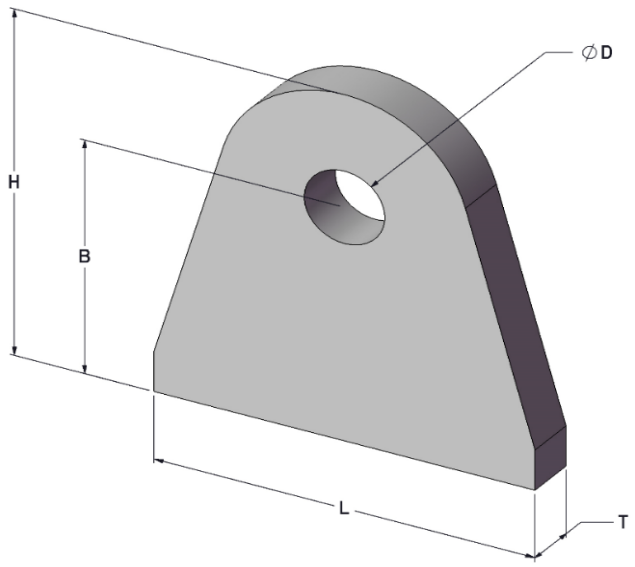

H	B	L	T	ø D To Suit
75	50	70	10	M12
90	60	85	12	M16
105	70	105	12	M20
120	80	120	16	M24
150	100	150	16	M30
180	120	175	25	M36
210	140	205	25	M42
225	150	225	32	M48
270	180	265	32	M56
300	200	300	36	M64
345	230	340	40	M72
375	250	365	40	M80

NOTES	
Material	Carbon Steel Gr.250
Standard finish	Mill
	Optional material to suit pipe grades

WELDED LUG: PRO-WL - Range up to 28.5T

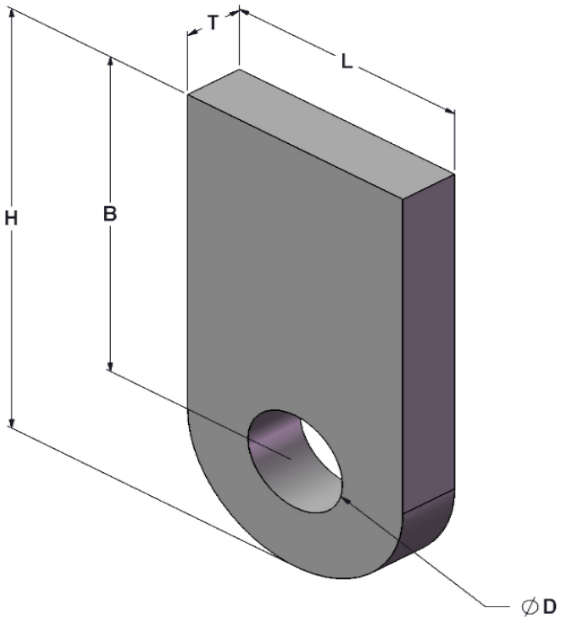

L	T	H	B	ø D To Suit
50	6	100	75	M10
50	6	100	75	M12
40	10	100	75	M16
50	16	100	75	M20
75	16	115	75	M24
100	16	150	100	M30
125	20	175	110	M36
125	25	175	110	M42
150	25	185	110	M48
150	32	185	110	M56
200	32	210	110	M64
250	40	325	200	M72
275	40	360	220	M80

NOTES	
Material	Carbon Steel Gr.250
Standard finish	Hot Dip Galvanised or Mill
	Typically used with a PRO 209

WELD TO BEAM ATTACHMENT: PRO-WBA/ T1 - Range up to 15T

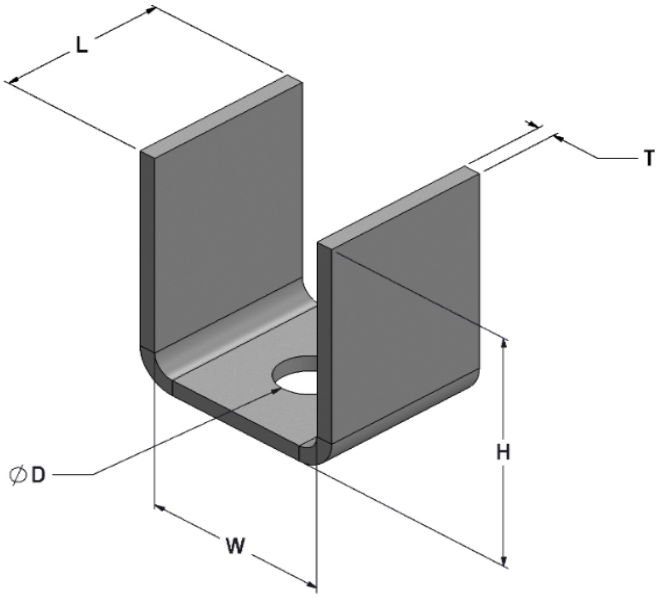

ø D To Suit	H	W	L	T
M10	75	43	50	6
M12	75	43	50	6
M16	75	55	50	8
M20	80	70	65	10
M24	115	95	75	16
M30	120	106	75	16
M36	165	130	130	20
M42	195	140	130	20
M48	210	152	130	20
M56	240	163	150	20
M64	250	175	150	20

NOTES	
Material	Carbon Steel Gr.250
Standard finish	Hot Dip Galvanised or Mill

WELD TO BEAM ATTACHMENT: PRO-WBA/ T2 - Range up to 15T

With Load Pin

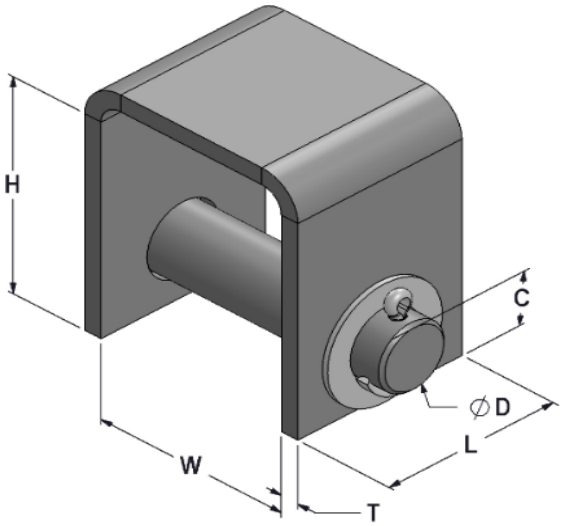

H	W	C	L	T	Diameter D
75	35	25	50	6	12
75	35	30	50	6	16
75	50	30	50	8	20
80	50	30	65	10	24
115	65	35	75	16	30
120	75	45	75	16	36
165	95	65	130	20	42
195	105	70	130	20	48
210	115	85	130	20	56
240	125	90	150	20	64
250	135	95	150	20	72

NOTES	
Material	Carbon Steel Gr.250
Standard finish	Hot Dip Galvanised or Mill

PROsupport
HEMISPHERICAL WASHER: PRO-HW - Range M6 to M80 & HEMISPHERICAL CUP: PRO-HC

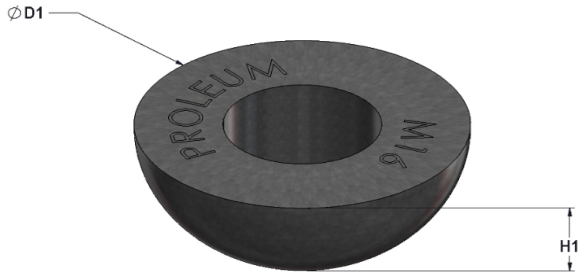

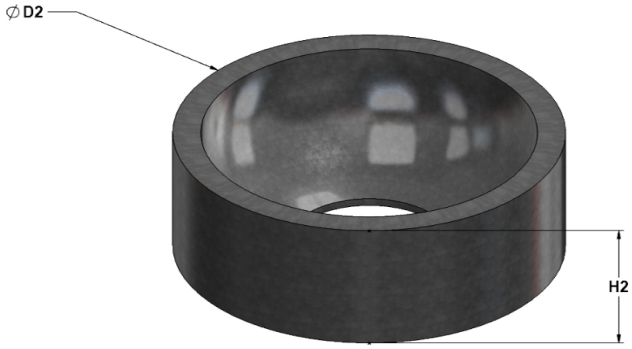

	Washer PRO-HW		Cup PRO-HC	
To Suit Drop Rod	**H1**	**ø D1**	**H2**	**ø D2**
M6	9	20	9	25
M10	12	26	10	32
M12	13	30	13	35
M16	16	36	16	42
M20	20	46	20	54
M24	25	57	25	67
M30	30	68	30	76
M36	35	80	35	100
M42	38	88	38	102
M48	43	100	40	120
M56	46	110	45	130
M64	49	120	50	150
M72	56	135	55	165
M80	62	150	60	108

NOTES	
Material	Carbon Steel
Standard finish	Hot Dip Galvanised or Mill
	Can be sold seperately

PLATE WASHER: PRO-PW - Range M10 to M64

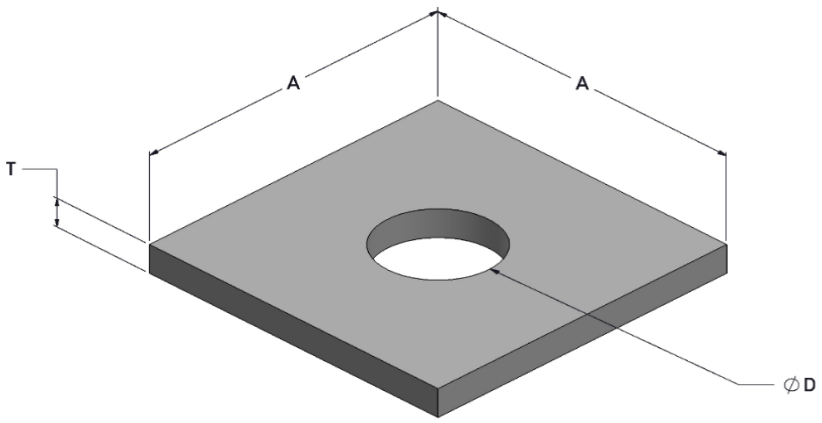

ø D To Suit	A	T
M10	40	5
M12	40	5
M16	50	6
M20	75	10
M24	100	12
M30	100	16
M36	150	16
M42	150	20
M48	150	20
M56	150	20
M64	200	32

NOTES	
Material	Carbon Steel Gr.250
Standard finish	Hot Dip Galvanised or Mill

STANDARD TRAPEZE BEAM: PRO-STB

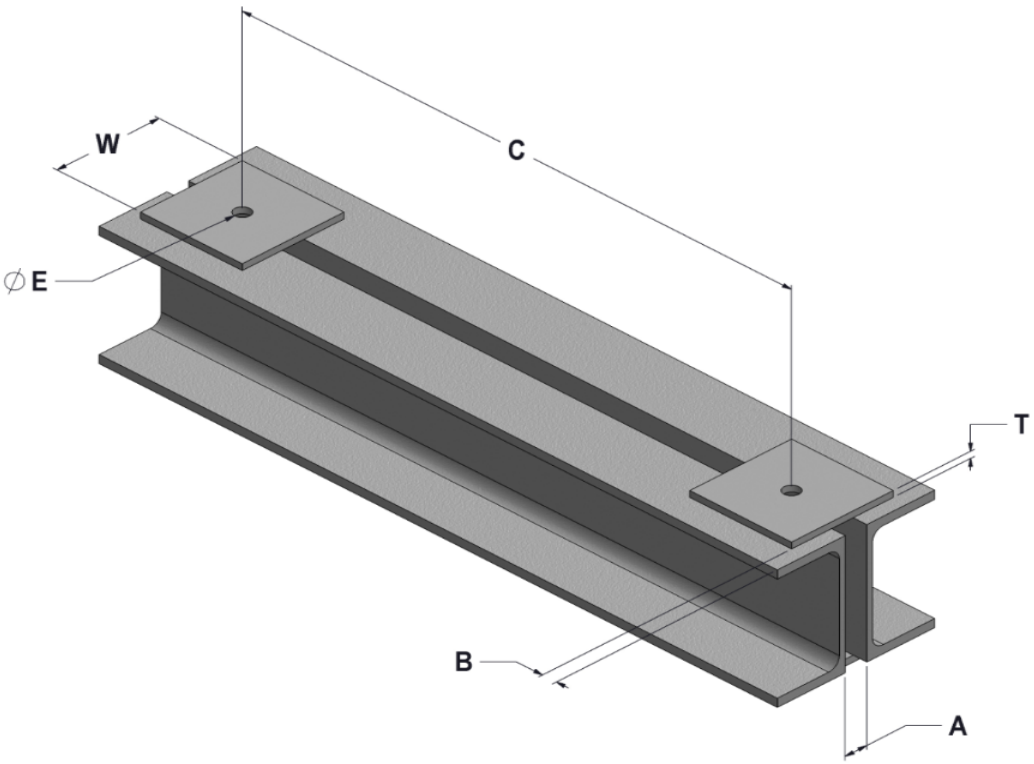

NOTES	
Material	Carbon Steel
Standard finish	Hot Dip Galvanised or Mill
	Can be fabricated to client's specifications
	Shown are the required dimensions to fabricate

SECTION D

HANGER ATTACHMENTS

HANGER CLAMP: PRO-HC - RANGE 15 TO 600 P 34

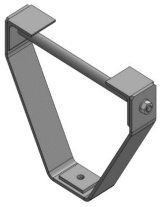

BEAM HANGER: PRO-BH - RANGE M12 TO M48 P 35

HANGER CLAMP: PRO-HC - Range 15 to 600

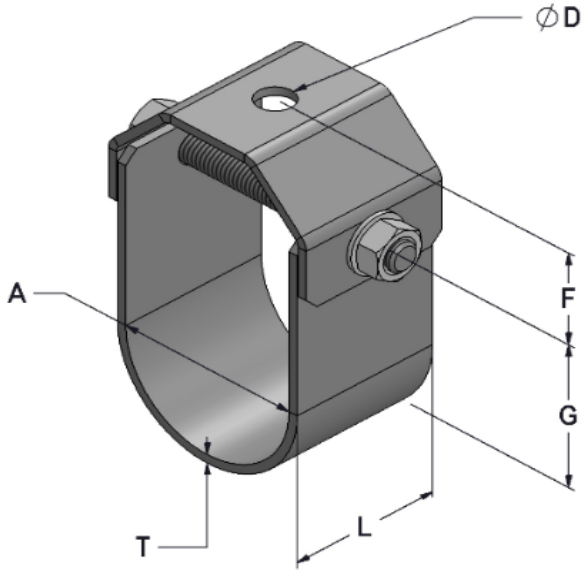

Pipe NB	Pipe OD	BOTTOM Material		TOP Material	G	F	Pivot	ø D
		L	T	T				
15	21.3	25	3	3	22	38	M6	8
20	26.9	25	3	3	23	41	M6	8
25	33.7	25	3	3	29	36	M6	8
32	42.4	32	3	3	41	31	M10	12
40	48.3	32	3	3	44	32	M10	12
50	60.3	32	3	3	50	32	M10	12
65	76.1	40	3	5	62	43	M12	14
80	88.9	40	3	5	68	42	M12	14
100	114.3	40	3	5	81	59	M12	14
150	168.3	50	6	6	116	67	M16	18
200	219.1	50	6	10	142	73	M16	18
250	273	50	6	10	179	79	M20	18
300	323.9	50	10	12	202	81	M20	22
350	355.6	65	10	12	218	87	M24	26
400	406.4	65	10	12	251	85	M24	26
450	457	75	10	12	278	112	M24	26
500	508	75	10	12	302	138	M24	32
600	610	75	12	16	353	142	M24	32

NOTES	
Material	Carbon Steel Gr.250
Standard finish	Hot Dip Galvanised for Carbon Steel. Mill for Stainless Steel
	Hanger rod to be ordered separately

BEAM HANGER: PRO-BH - Range M12 to M48

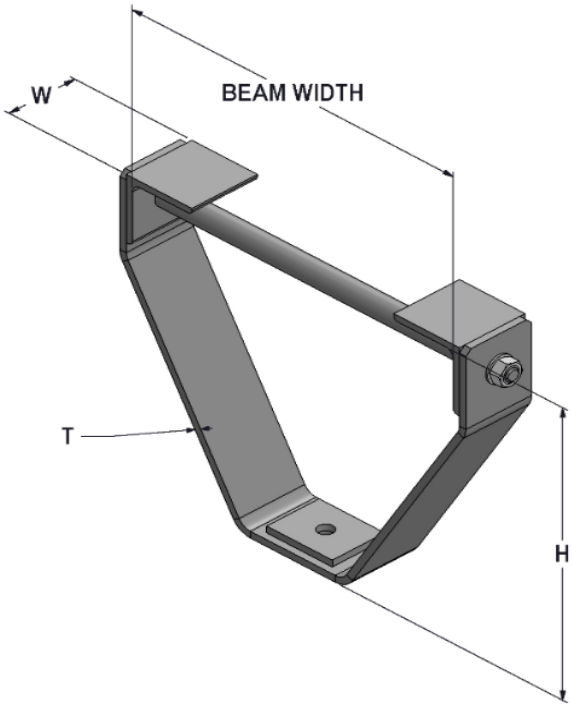

To Suit Flange Width	H	To Suit Dropload	L	T
203	179	M10	40	8
203	180	M12	50	8
203	192	M16	50	10
254	214	M20	65	16
254	228	M24	75	16
254	260	M30	100	16
254	300	M36	100	20
254	333	M42	125	25

NOTES	
Material	Carbon Steel Gr.250
Standard finish	Hot Dip Galvanised or Mill
	Beam size to be nominated
	This support is NOT adjustable made to suit beam size
	Can be fabricated for other beam sizes

SECTION E

LINE STOPS AND GUIDES

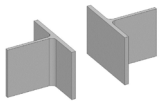

TYPE A

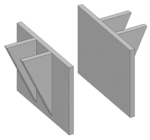

TYPE B

STANDARD SHOE STOP ATTACHMENT: PRO-SS P 37

TYPE A & B

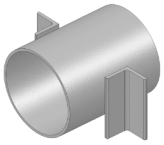

TYPE C & D

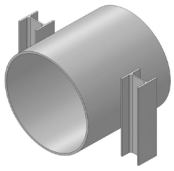

TYPE E

STANDARD PIPE GUIDE: PRO-PG - RANGE UP TO 750NB P 38

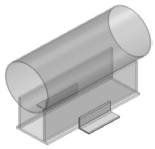

25NB TO 200NB

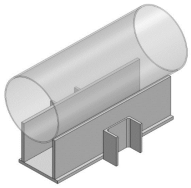

250NB TO 700NB

PRO-SG STANDARD SHOE GUIDES P 39

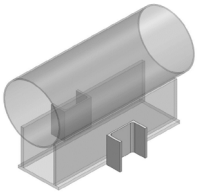

TYPE A

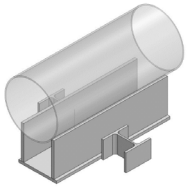

TYPE B

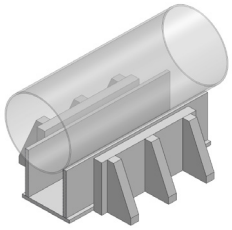

TYPE C TO E

STANDARD SHOE GUIDE: PRO-SG
For Large Pipe Shoes and Trunnions P 40

PROsupport
STANDARD SHOE STOP ATTACHMENT: PRO-SS
Range up to 1500NB

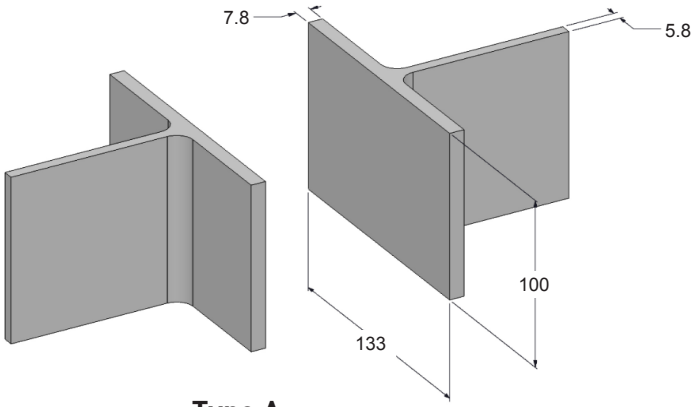

Type A

Type A Suits
25NB - 150NB Pipes

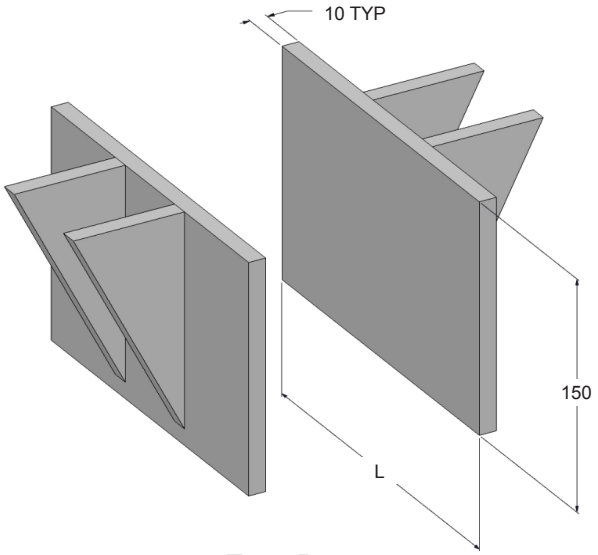

Type B

Type B Suits	
Pipe NB	L
200 to 350	150
400	200
450 to 500	250
600 to 650	300
700 to 800	450
850 to 900	500
950 to 1000	550
1050 to 1500	600

NOTES	
Material	Carbon Steel Gr.250
Standard finish	Hot Dip Galvanised or Mill
	Shoe stops can be welded to the underside of any shoe if required

STANDARD PIPE GUIDE: PRO-PG - Range up to 750NB

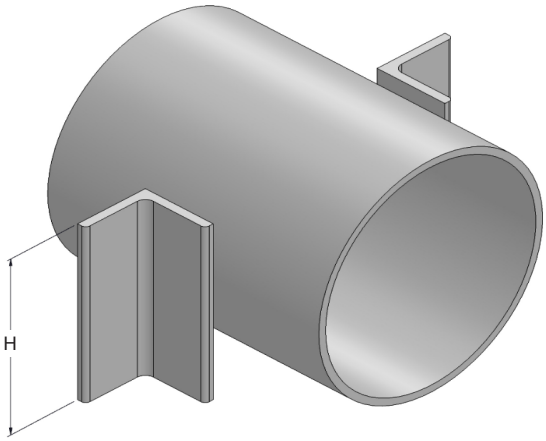

Type A

Pipe NB	Pipe OD	H	Material
25	33.7	30	50 x 6 EA
32	42.4	40	50 x 6 EA
40	48.3	45	50 x 6 EA
50	60.3	55	50 x 6 EA
65	76.1	60	50 x 6 EA
80	88.9	75	50 x 8 EA
100	114.3	80	50 x 8 EA
150	168.3	105	75 x 8 EA
200	219.1	135	76 x 8 EA
250	273	170	100 x 6 EA
300	323.9	200	125 x 8 EA
350	355.6	220	125 x 8 EA

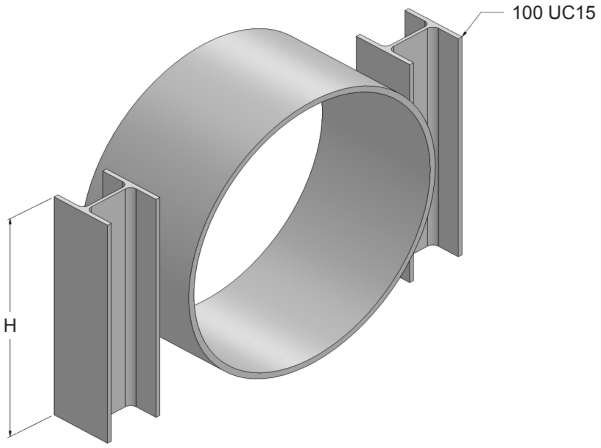

Type B

Pipe NB	Pipe OD	H
400	406.4	250
450	457	285
500	508	315
600	610	380
650	660	410
700	711	440
750	762	470

NOTES	
Material	Carbon Steel Gr.250
Standard finish	Hot Dip Galvanised or Mill
	For Stainless Steel pipe it is recommended to bond a SS Gr.316 shim to the face of the guide
	Guides supplied in pairs

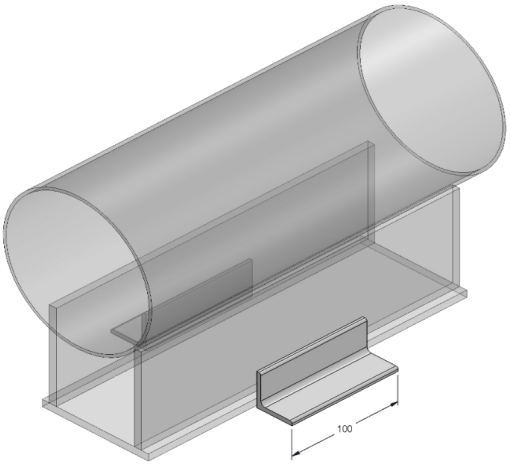

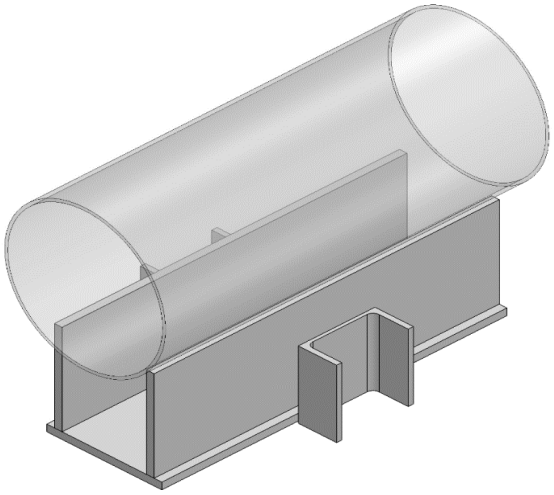

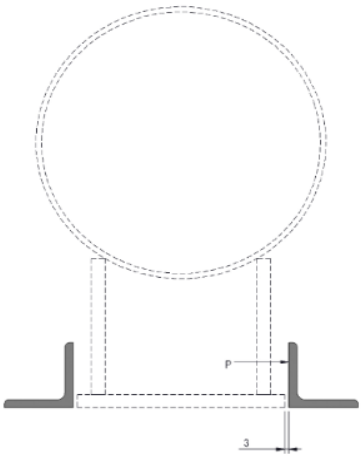

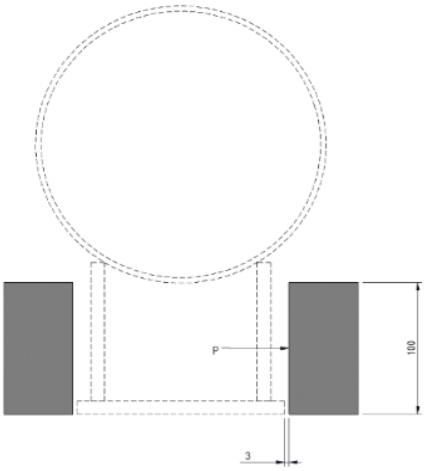

Type A

Type A Suits
25NB - 200NB Pipes

Type B

Type A Suits
250NB - 700NB Pipes

NOTES	
Material	Carbon Steel Gr.250 or Stainless Steel Gr.316
Standard finish	Hot Dip Galvanised or Mill for CS, Mill for SS

PROsupport
HEAVY DUTY GUIDE: PRO-HDG
For large diameter pipes or trunnions. Type A to E

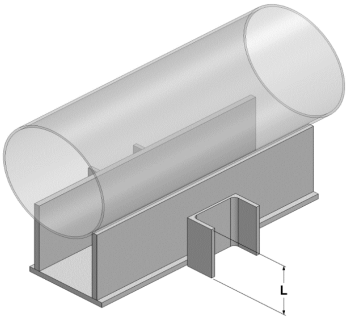

TFC
Type A

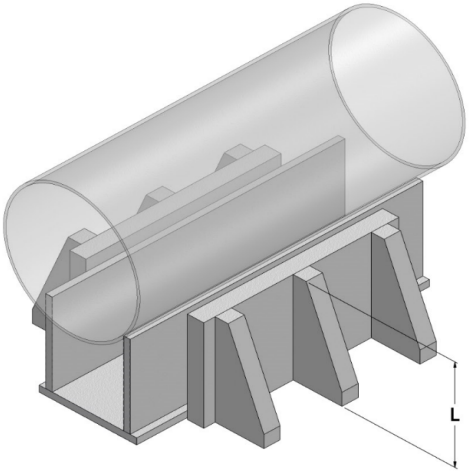

Type C, D, E

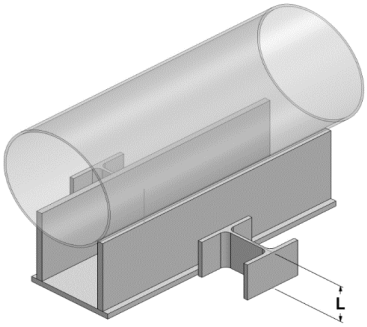

100 UC15
Type B

TYPE	L
A	100
B	70
C	330
D	435
E	475

NOTES	
Material	Carbon Steel Gr.250
Standard finish	Hot Dip Galvanised or Mill
	For Stainless Steel pipe it is recommended to bond a SS Gr.316 shim to the face of the guide
	Guides supplied in pairs

SECTION F

PIPE SHOES, SLIDE PLATES AND PIPE STANDS

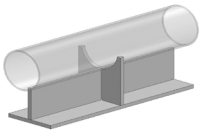

WELDED PIPE SHOE: PRO-WPS - RANGE 25 TO 750 P 43

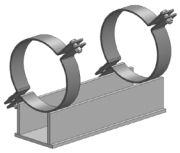

STANDARD CLAMP SHOE: PRO-CPS - RANGE 25 TO 700 P 44

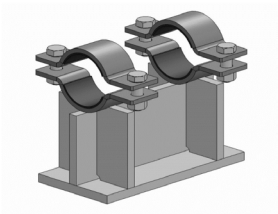

INSULATED PIPE SHOE: PRO-IS/ T1
For Stainless Steel, Duplex or Super Duplex Pipe P 45

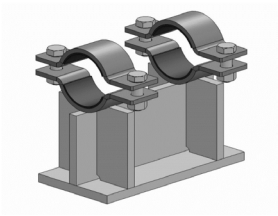

INSULATED PIPE SHOE: PRO-IS/ T2
For Copper Nickel Cu/Ni Pipes P 46

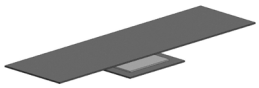

SLIDE PLATES: PRO-SP P 47

ADJUSTABLE PIPE STANDS: PRO-APS/ T1 OR T2 P 48

PROsupport
STRUCTURAL TYPE STANDS

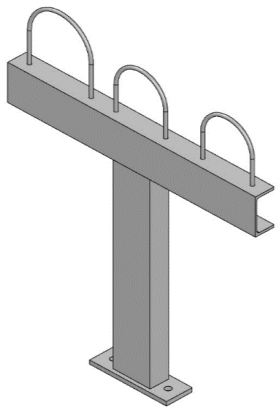

PRO TEE POST

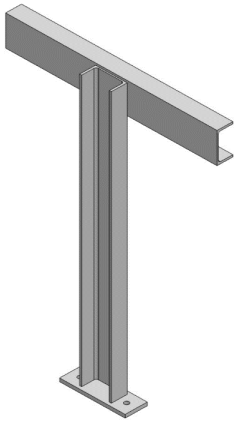

PRO TEE FRAME

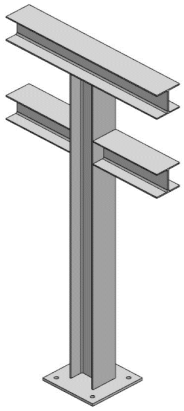

PRO CROSS FRAME

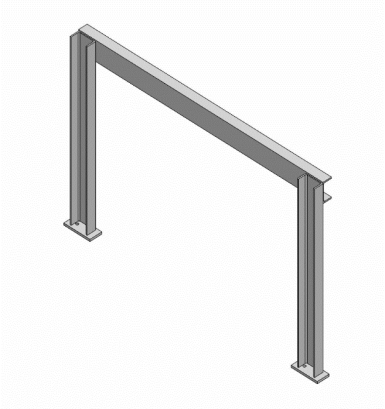

PRO GOAL POST

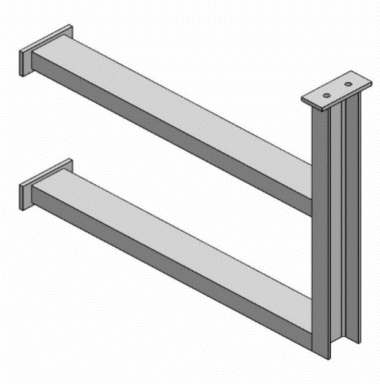

PRO F FRAME

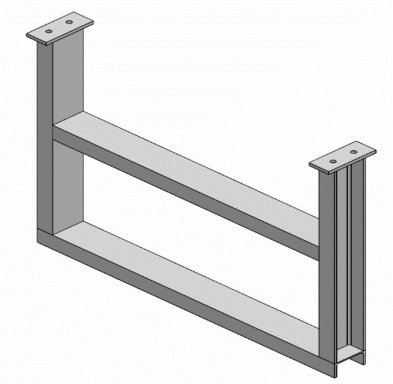

PRO H FRAME

Avaliable in a range of designs and material types:

100PFC to 300PFC
50EA TO 150EA
150UC TO 300UC

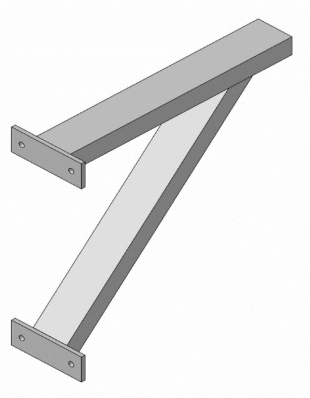

PRO K FRAME

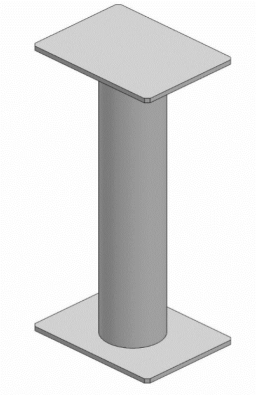

PRO TRUNION

Avaliable in a range of designs and material types:

100PFC to 300PFC
50EA TO 150EA
150UC TO 300UC
CHS 50NB TO 600NB

PROsupport
WELDED PIPE SHOE: PRO-WPS - Range 25 to 750

PROLEUM
FORWARD THINKING SOLUTIONS

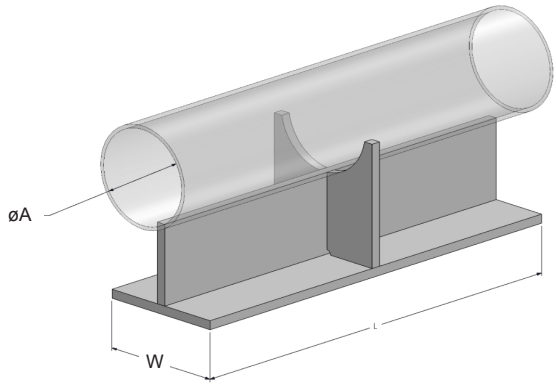

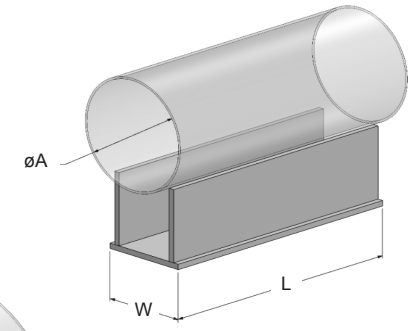

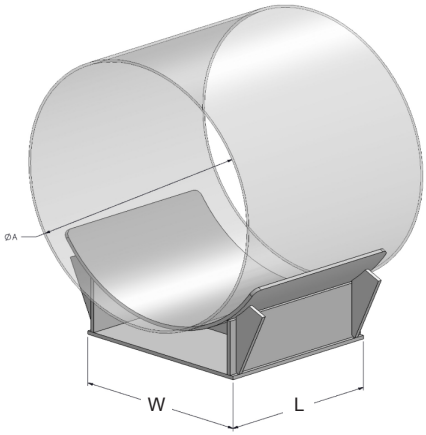

Pipe NB	Shoe Height to BOP	W	L	Gussets	Shoe
25	100	133	250	Not reqd	200UB25
32	100	133	280	Not reqd	200UB25
40	100	133	300	Not reqd	200UB25
50	100	133	300	Not reqd	200UB25
65	100	133	300	Not reqd	200UB25
80	100	133	300	Not reqd	200UB25
100	100	133	350	Required	200UB25
150	100	133	350	Required	200UB25
200	100	150	450	N/A	12mm Plate
250	100	150	450	N/A	12mm Plate
300	100	200	450	N/A	12mm Plate
350	100	200	450	N/A	12mm Plate
400	100	250	450	N/A	12mm Plate
450	100	300	450	N/A	12mm Plate
500	100	350	450	N/A	12mm Plate
600	100	400	450	N/A	12mm Plate
650	100	400	450	N/A	12mm Plate
700	100	400	450	N/A	12mm Plate
750 & above	100	500	450	N/A	12mm Plate

NOTES	
Material	Carbon Steel
Standard finish	Hot Dip Galvanised or Mill
	Max operating Temp: 200 deg C for HDG

STANDARD CLAMP SHOE: PRO-CPS - Range 25 to 700

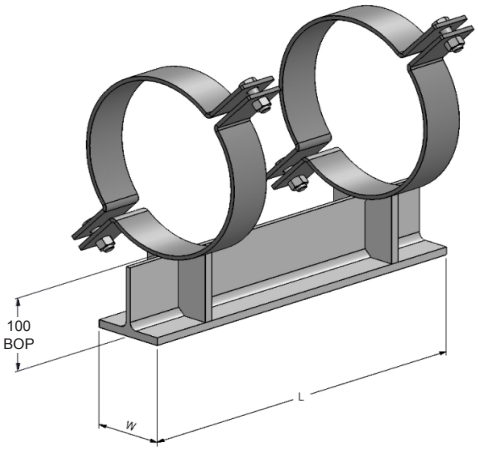

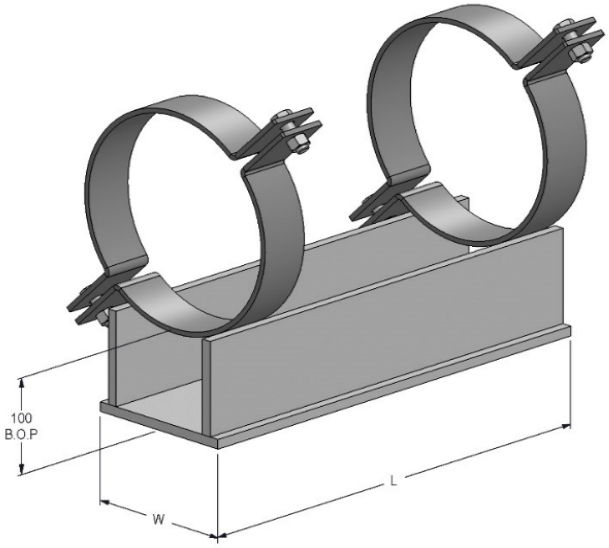

PIPE SIZE					
Pipe NB	Pipe OD	W	L	GUSSETS	BASE MATERIAL
25	33.7	133	300		200UB-25
32	42.4	133	300		200UB-25
40	48.3	133	300		200UB-25
50	60.3	133	300		200UB-25
65	76.1	133	300		200UB-25
80	88.9	133	300		200UB-25
100	114.3	133	300	YES	200UB-25
150	168.3	133	300	YES	200UB-25
200	219.1	150	450		12mm
250	273	150	450		12mm
300	323.9	200	450		12mm
350	355.6	200	450		12mm
400	406.4	250	450		12mm
450	457	300	450		12mm
500	508	350	450		12mm
600	610	400	450		12mm
650	660	400	450		12mm
700	711	400	450		12mm

NOTES	
Material	Carbon Steel Gr.250
Standard finish	Hot Dip Galvanised or Mill
	See PRO-SP for slide plate details
	Requires U/B Shoe

PROsupport

INSULATED PIPE SHOE: PRO-IS/ T1

For Stainless Steel, Duplex or Super Duplex Pipes

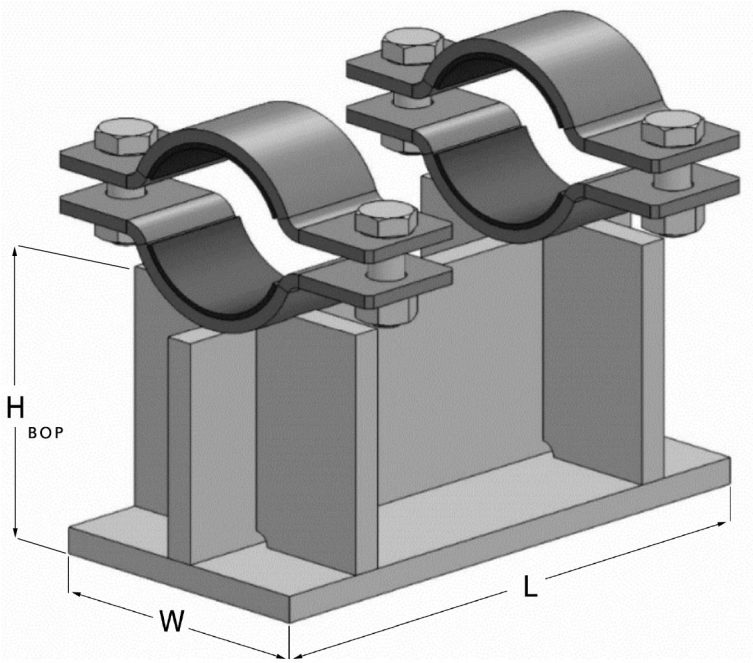

PIPE SIZE					
Pipe NB	Pipe OD	H	W	L	GUSSETS
25	33.7	100	100	200	
32	42.4	100	100	200	
40	48.3	100	100	200	
50	60.3	100	100	200	
65	76.1	100	100	200	
80	88.9	100	100	250	YES
100	114.3	100	100	250	YES
150	168.3	100	150	250	YES
200	219.1	100	150	300	YES
250	273	100	200	300	YES
300	323.9	100	200	400	YES
350	355.6	100	200	400	YES
400	406.4	100	250	400	YES
450	457	100	250	400	YES
500	508	100	300	400	YES
600	610	100	300	450	YES

NOTES	
Material	Carbon Steel Gr.250 or Stainless Steel Gr.316
Insulator	Neoprene compound with self-extinguishing fire retardant
Standard finish	Got Dip Galvanised for Carbon. Passivation for Stainless Steel
	Temperature range -35°C to 100°C

PROsupport
INSULATED PIPE SHOE: PRO-IS/ T2
For Copper Nickle Cu/Ni Pipes

PROLEUM
FORWARD THINKING SOLUTIONS

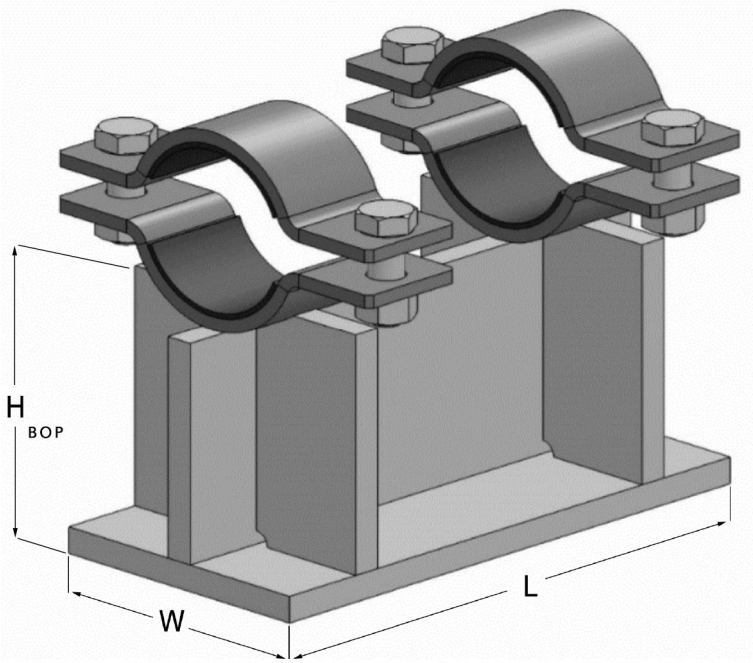

PIPE SIZE					
Pipe NB	Pipe OD	H	W	L	GUSSETS
25	30	100	75	200	
32	38	100	100	200	
40	44.5	100	100	200	
50	57	100	100	200	
65	76.1	100	100	200	
80	88.9	100	100	250	YES
100	108	100	100	250	YES
150	159	100	150	250	YES
200	219	100	150	300	YES
250	267	100	200	300	YES
300	323.9	100	200	400	YES
350	368	100	200	400	YES

NOTES	
Material	Carbon Steel Gr.250 or Stainless Steel Gr.316
Insulator	Neoprene compound with self-extinguishing fire retardant
Standard finish	Got Dip Galvanised for Carbon. Passivation for Stainless Steel
	Temperature range -35°C to 100°C

SLIDE PLATES: PRO-SP

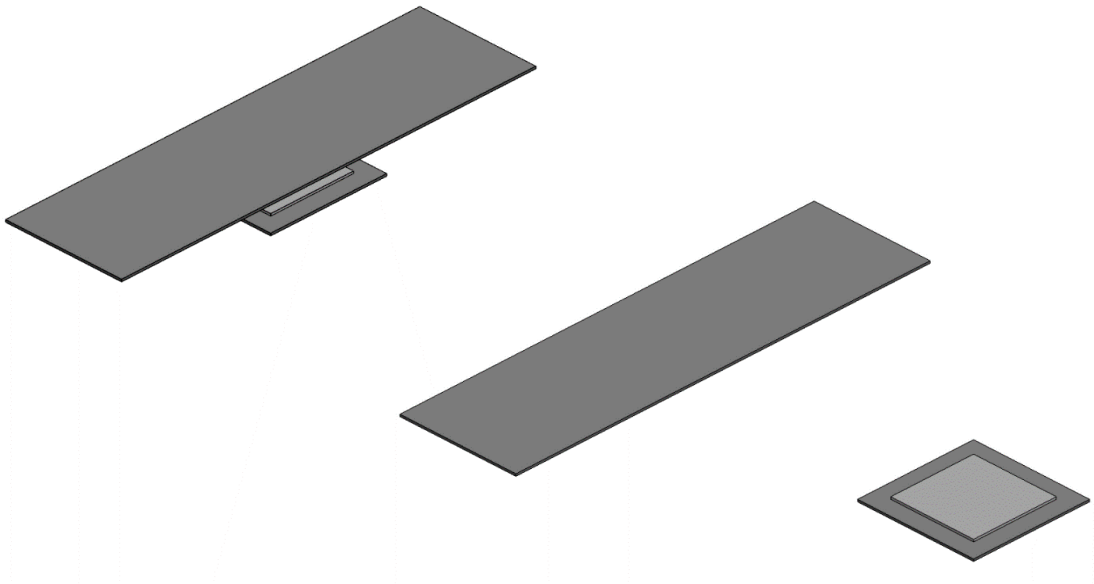

Typical Slide Plate to Suit	L1	W1	L2	W2
PROLEUM Pipe Shoes 25NB - 150NB	100	100	280	113
PROLEUM Pipe Shoes 200NB & 250NB	110	100	430	130
PROLEUM Pipe Shoes 300NB & 350NB	125	125	430	180
PROLEUM Pipe Shoes 400NB	140	140	430	230
PROLEUM Pipe Shoes 450NB	150	150	430	280
PROLEUM Pipe Shoes 500NB	160	160	430	320
PROLEUM Pipe Shoes 600NB - 700NB	355	125	430	380
PROLEUM Pipe Shoes 750NB - 850NB	450	155	430	480
PROLEUM Pipe Shoes 900NB - 1000NB	495	155	430	530
PROLEUM Pipe Shoes 1050NB - 1200NB	520	170	430	630

NOTES	
Material	Top Plate 3mm Stainless Steel Gr.316 2B finish
	Base Plate 3mm Carbon Steel
Slide Pad	3mm PTFE (Teflon 25% Glass)
	Top plate to be welded to base of shoe, bottom plate c/w bonded PTFE to be attached to existing steel work
	Slide plate adds additional 10mm to bottom of pipe
	Max temperature 135° C - higher temp material available

ADJUSTABLE PIPE STANDS: PRO-APS/ T1 or T2

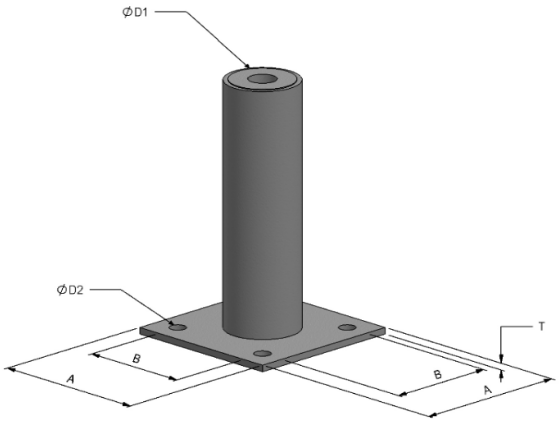

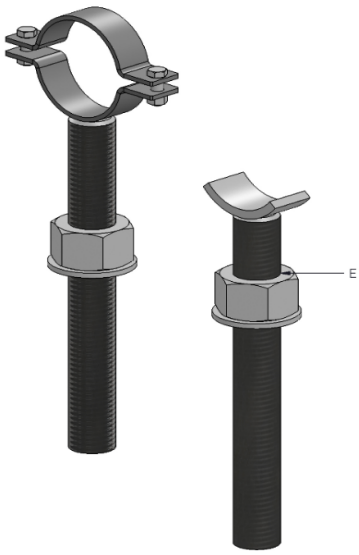

To Suit Pipe NB	ø D1	A	T	ø D2	B	Support Rod Dia	CLAMP/ CRADLE
50	50	130	8	14	100	M30	50 x 8
65	50	130	8	14	100	M30	50 x 8
80	80	180	10	18	130	M42	65 x 8
100	80	180	10	18	130	M42	65 x 10
150	80	200	12	22	160	M48	65 x 10
200	80	250	12	22	200	M48	90 x 10
250	80	250	12	22	200	M48	90 x 10
300	100	250	12	22	200	M56	90 x 10
350	100	300	16	26	230	M56	100 x 12
400	100	300	16	26	230	M56	100 x 12
450	150	300	16	26	230	M64	180 x 16
500	150	350	20	32	270	M72	180 x 16
600	150	350	20	32	270	M72	180 x 16

NOTES	
Material	Carbon Steel Gr.250
Standard finish	Hot Dip Galvanised
	Vertical load support only
	Dimension L to be confirmed prior to manufacture
	Nut to be tack weld after Installation
	Max Operating Temp: 180 deg C
	Height Adjustment +/- 75mm
	Height to be specified by client

SECTION G

RISER PIPE SUPPORT

RISER CLAMP STANDARD: PRO-RC/ 250 P 50

RISER CLAMP STANDARD: PRO-RC/ 460 P 51

RISER CLAMP STANDARD: PRO-RC/ 250

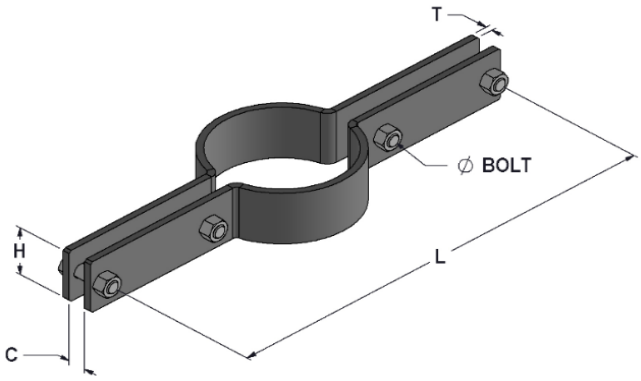

UP TO AND INCLUDING 300 NB

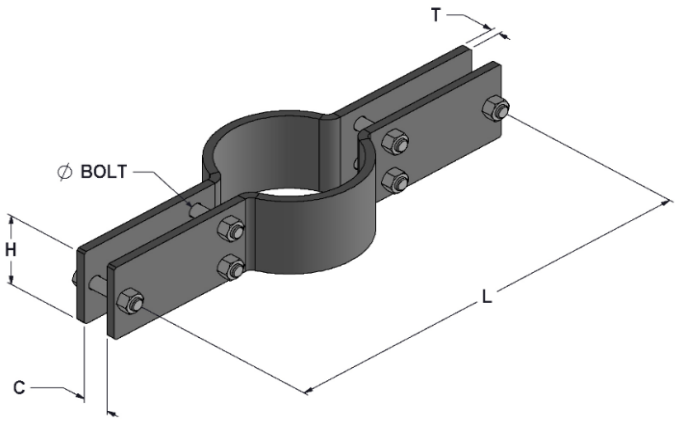

ABOVE 300 NB

Pipe NB	H	T	Bolt ø	C
100	90	10	M12	25
125	100	10	M12	25
150	100	16	M20	25
200	100	16	M24	25
250	120	16	M24	30
300	120	20	M24	30
350	150	20	M24	35
400	150	20	M24	35
450	150	25	M24	35
500	180	25	M24	35
600	200	25	M30	41

NOTES	
Material	Carbon Steel Gr.250
Standard finish	Hot Dip Galvanised for Carbon Steel. Mill for Stainless Steel
	Riser supports are not designed to CLAMP the pipe
	4 x shear lugs to be welded to the pipe at 45° intervals
	Refer to Riser Supports Load Chart for dimension H
	Temperature range up to 100° C
	L dimensions to be specified by client

RISER CLAMP STANDARD: PRO-RC/ 460

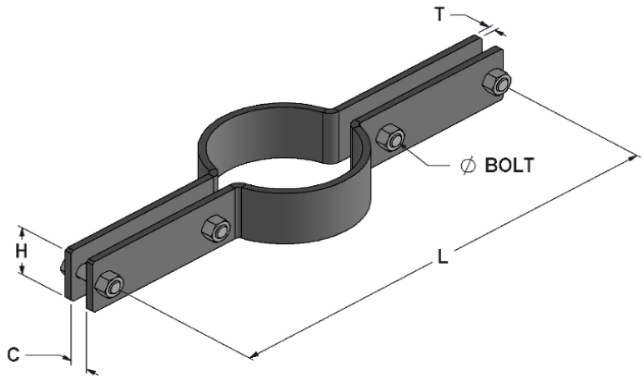

UP TO AND INCLUDING 300 NB

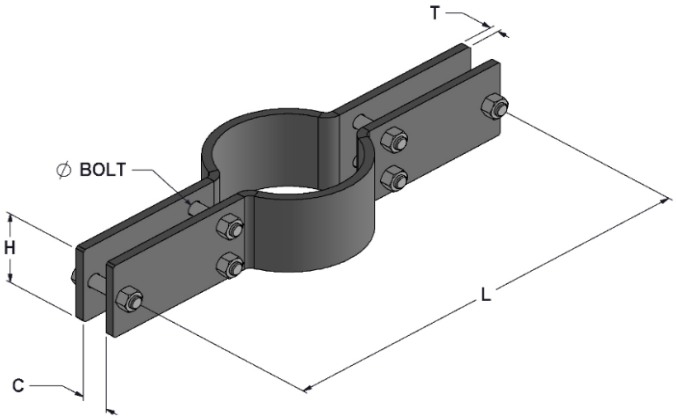

ABOVE 300 NB

Pipe NB	Pipe OD	H	T	Bolt ø	C
100	114.3	90	10	M12	25
125	141.3	100	10	M12	25
150	168.3	100	16	M20	25
200	219.1	100	16	M24	25
250	273.1	120	16	M24	30
300	323.9	120	20	M24	30
350	355.6	150	20	M24	35
400	406.4	150	20	M24	35
450	457.2	150	25	M24	35
500	508.8	180	25	M24	35
600	609.6	200	25	M30	41

NOTES	
Material	Carbon Steel Boiler Plate Gr.460R
Standard finish	Mill
	Riser supports are not designed to CLAMP the pipe
	4 x Shear lugs to be welded to the pipe at 45° intervals
	Temperature range up to 410° C
	L dimensions to be specified by client

SECTION H

PIPE SADDLES

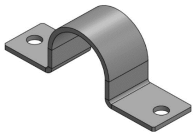

SADDLE GUIDE: PRO-SG P 53

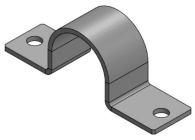

SADDLE CLAMP: PRO-SC P 54

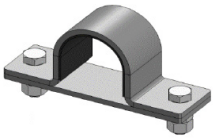

INSULATED PIPE SADDLE: PRO-IS/ T1
For Stainless Steel, Duplex or Super Duplex Pipes P 55

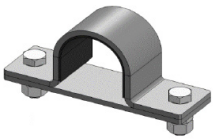

INSULATED PIPE SADDLE: PRO-IS/ T2
For Copper Nickel Cu/Ni Pipes P 56

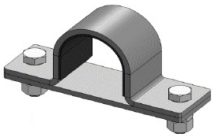

INSULATED PIPE SADDLE: PRO-IS/ T3
For FRP Pipes P 57

PROLEUM
FORWARD THINKING SOLUTIONS

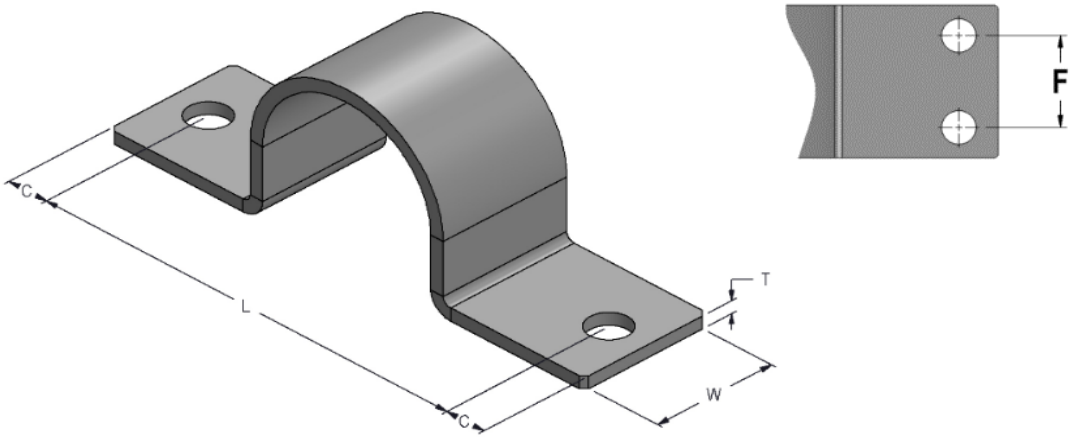

Pipe NB	Pipe OD	Clamp Radius	L	C	W	T	F	Hole To Suit
15	21.3	14	106	38	40	5		M10
20	26.9	17	110	38	40	5		M10
25	33.7	21	114	38	40	5		M12
32	42.4	25	128	38	40	8		M12
40	48.3	28	158	38	40	8		M12
50	60.3	34	162	38	40	8		M12
65	76.1	43	178	38	50	10		M16
80	88.9	49	198	38	50	10		M16
100	114.3	62	216	38	50	10		M16
150	168.3	89	272	38	65	10		M20
200	219.1	115	352	30	65	16		M20
250	273	138	410	30	65	16		M20
300	323.9	164	460	30	65	16		M20
350	355.6	180	490	30	65	16		M20
400	406.4	205	550	30	65	16		M24
450	457	231	600	30	65	16		M24
500	508	256	650	30	65	16		M24
600	610	308	750	30	100	16	60	M20
650	660	333	800	30	100	16	60	M20
700	711	358	850	30	100	16	60	M20
750	762	385	900	30	100	16	60	M20

NOTES	
Material	Carbon Steel
Standard finish	Hot Dip Galvanised for Carbon Steel. Mill for Stainless Steel
	Bolts not included
	Max Operating Temp – 200 deg C for HDG

SADDLE CLAMP: PRO-SC

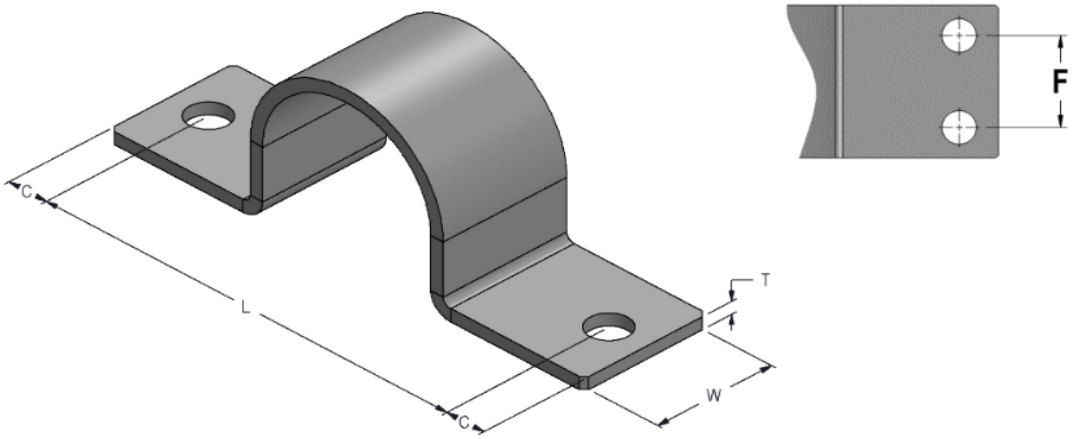

PIPE SIZE								
Pipe NB	Pipe OD	Clamp Radius	L	C	W	T	F	Hole To Suit
15	21.3	11	102	38	40	5		M10
20	26.9	14	106	38	40	5		M10
25	33.7	18	110	38	40	5		M12
32	42.4	22	124	38	40	8		M12
40	48.3	25	154	38	40	8		M12
50	60.3	31	158	38	40	8		M12
65	76.1	40	170	38	50	10		M16
80	88.9	46	190	38	50	10		M16
100	114.3	59	208	38	50	10		M16
150	168.3	86	264	38	65	10		M20
200	219.1	112	344	30	65	16		M20
250	273	139	410	30	65	16		M20
300	323.9	164	460	30	65	16		M20
350	355.6	180	490	30	65	16		M20
400	406.4	205	550	30	65	16		M24
450	457	231	600	30	65	16		M24
500	508	256	650	30	65	16		M24
600	610	308	710	30	100	16	60	M20
650	660	333	810	30	100	16	60	M20
700	711	358	860	30	100	16	60	M20
750	762	385	920	30	100	16	60	M20

NOTES	
Material	Carbon Steel Gr.250
Standard finish	Hot Dip Galvanised for Carbon Steel. Mill for Stainless Steel
	Bolts not included
	Max Operating Temp – 200 deg C for HDG

PROsupport

INSULATED PIPE SADDLE: PRO-IS/ T1

For Stainless Steel, Duplex or Super Duplex Pipes

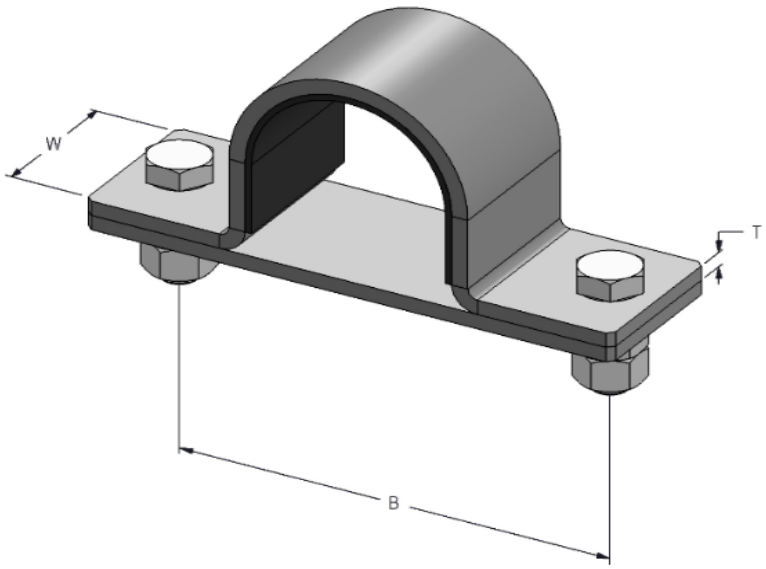

PIPE SIZE					
Pipe NB	Pipe OD	W	T	B	Bolt
15	21.3	40	5	100	M10
20	26.9	40	5	110	M10
25	33.7	40	5	120	M10
32	42.4	40	5	130	M12
40	48.3	40	5	130	M12
50	60.3	40	8	134	M12
65	76.1	40	8	160	M16
80	88.9	50	8	174	M16
100	114.3	50	8	206	M16
150	168.3	65	10	276	M20
200	219.1	65	10	356	M20
250	273	65	16	410	M20
300	323.9	65	16	460	M20
350	355.6	65	16	490	M20
350	355.6	65	16	490	M30
400	406.4	65	16	550	M30
450	457	65	16	600	M36
500	508	65	16	650	M36
600	610	100	16	750	M42

NOTES	
Material	Carbon Steel Gr.250 or Stainless Steel Gr.316
Base Material	Bear Brand Tufnol 10mm thick
Insulator	Neoprene compound with self-extinguishing fire retardant
Standard finish	Hot Dip Galvanised for Carbon Steel. Mill for Stainless Steel

PROsupport

INSULATED PIPE SADDLE: PRO-IS/ T2

For Copper Nickel Cu/Ni Pipes

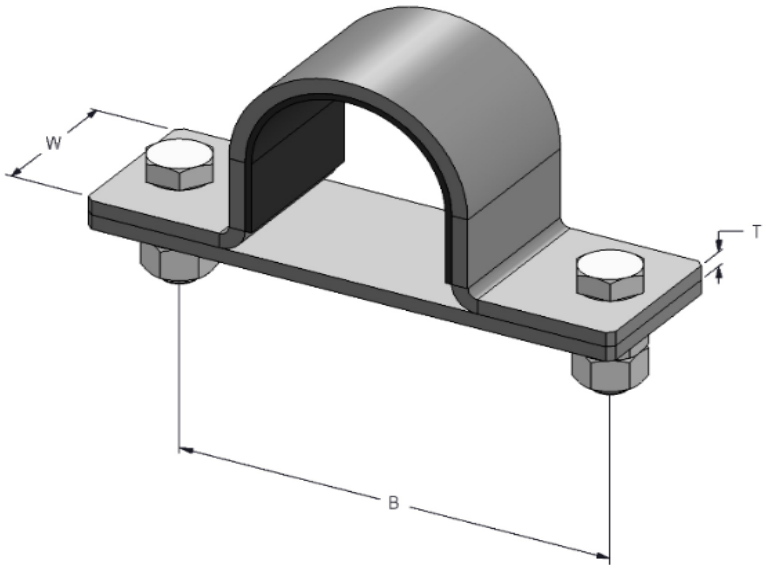

PIPE SIZE					
Pipe NB	Pipe OD	W	T	B	Bolt
20	25	40	5	110	M10
25	30	40	5	120	M10
32	38	40	5	130	M12
40	44.5	40	5	130	M12
50	57	40	8	134	M12
65	76.1	40	8	160	M16
80	88.9	50	8	174	M16
100	108	50	8	206	M16
150	159	65	10	276	M20
200	219.1	65	10	356	M20
250	267	65	16	410	M20
300	323	65	16	460	M20
350	368	65	16	490	M20

NOTES	
Material	Carbon Steel Gr.250 or Stainless Steel Gr.316
Base Material	Bear Brand Tufnol 10mm thick
Insulator	Neoprene compound with self-extinguishing fire retardant
Standard finish	Hot Dip Galvanised for Carbon Steel. Mill for Stainless Steel

PROsupport
INSULATED PIPE SADDLE: PRO-IS/ T3
For FRP Pipes

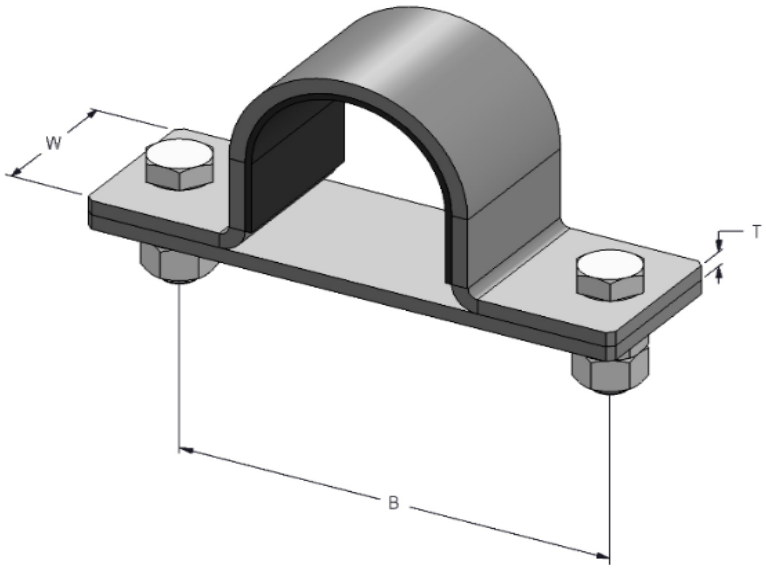

PIPE SIZE					
Pipe NB	Pipe OD	W	T	B	Bolt
25	33.6	40	5	120	M10
40	49	40	5	130	M12
50	61.3	40	8	138	M12
80	90	50	8	174	M16
100	115.6	50	8	206	M16
150	169.8	65	10	276	M20
200	222.8	65	10	356	M20
250	280.1	65	16	412	M20

NOTES	
Material Saddle & Bolts	Stainless Steel Gr.316
Base Material	Cork Neoprene Composite 10mm thick
Insulator	Neoprene Compound with Self-extinguishing Fire Retardant

SECTION J

HANGER COMPONENTS AND FORGINGS

ALL-THREAD ROD: PRO-AT P 59

THREADED DROP-ROD: PRO-DR P 60

FORGED EYENUT: PRO-FE P 61

WELDED SPADE END AND ROD: PRO-WS P 62

ROD CONNECTOR: PRO-RC P 63

FORGED CLEVIS AND PIN: PRO-FC P 64

FORGED TURNBUCKLE: PRO-TB P 65

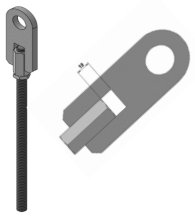

SPADE END CONNECTOR: PRO-SEC P 66

ALL-THREAD ROD: PRO-AT

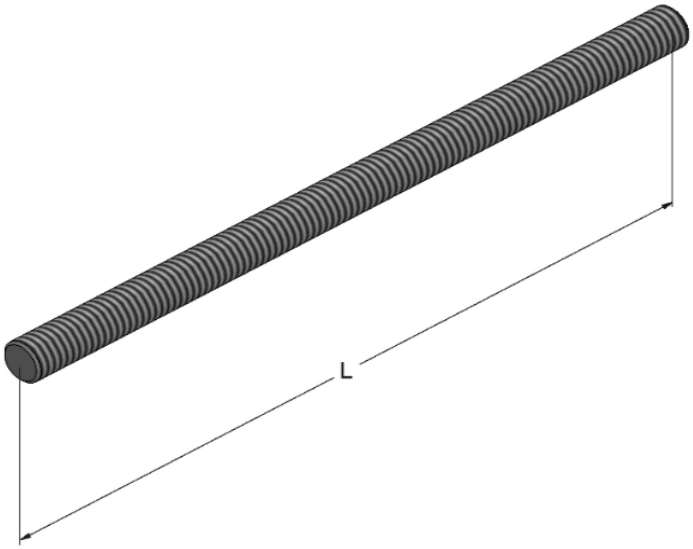

Thread Diameter	Available Length
M10	1 - 3M
M12	1 - 3M
M16	1 - 3M
M20	1 - 3M
M24	1 - 3M
M30	1 - 3M
M36	1 - 3M
M42	1 - 3M
M48	1 - 3M
M56	1M
M64	1M

NOTES	
Material	Carbon Steel Gr.4.6 or Stainless Steel Gr.316
Standard finish	Zinc Plated, Hot Dip Galvanised or Mill
Special finishes	Cadmium Plate and PTFE coating
	Standard stock lengths 1m or 3m

THREADED DROP-ROD: PRO-DR

LH/RH Thread

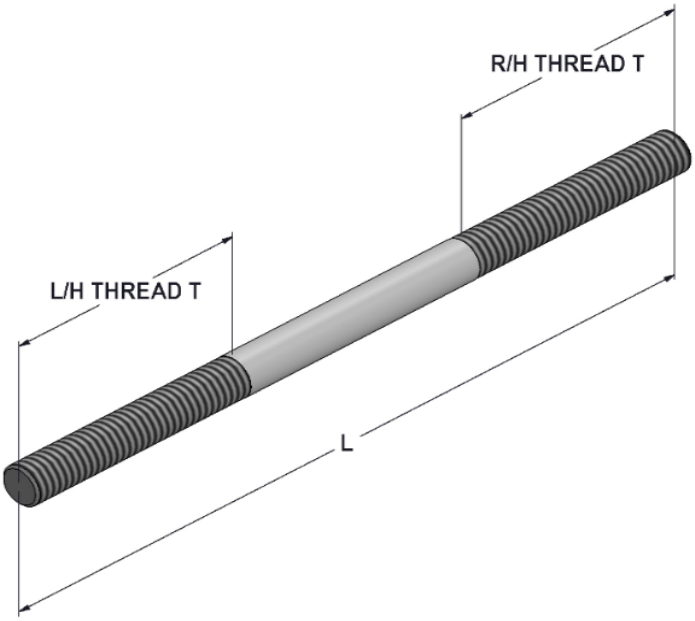

Thread Type	Thread Lengths T	Minimum Rod Length L
M10	100	300
M12	100	300
M16	130	360
M20	130	360
M24	150	400
M30	150	400
M36	180	460
M42	180	460
M48	200	500
M56	200	500
M64	200	500

NOTES	
Material	Carbon Steel Gr.250
Standard finish	Hot Dip Galvanised, Zinc Plated or Mill
	Maximum recommended length – 1500mm

FORGED EYENUT: PRO-FE

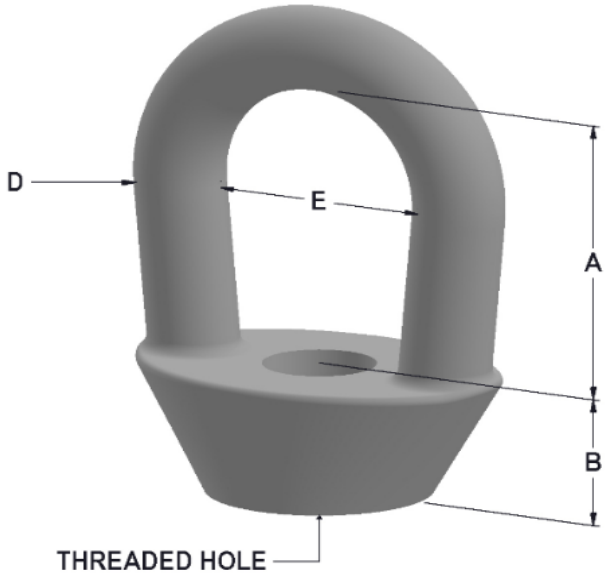

Thread Size	A	B	ø D	E
mm	mm	mm	mm	mm
M10	51	17	13	38
M12	51	17	13	38
M16	51	17	13	38
M20	67	25	19	51
M24	67	25	19	51
M30	86	32	25	64
M36	86	32	25	64
M42	159	57	38	102
M48	159	57	38	102
M56	159	57	38	102
M64	159	57	38	102

NOTES	
Material	Forged Carbon or Stainless Steel Gr.316
Standard finish	Hot Dip Galvanised or Mill for Carbon
	Right hand thread standard

WELDED SPADE END AND ROD: PRO-WS

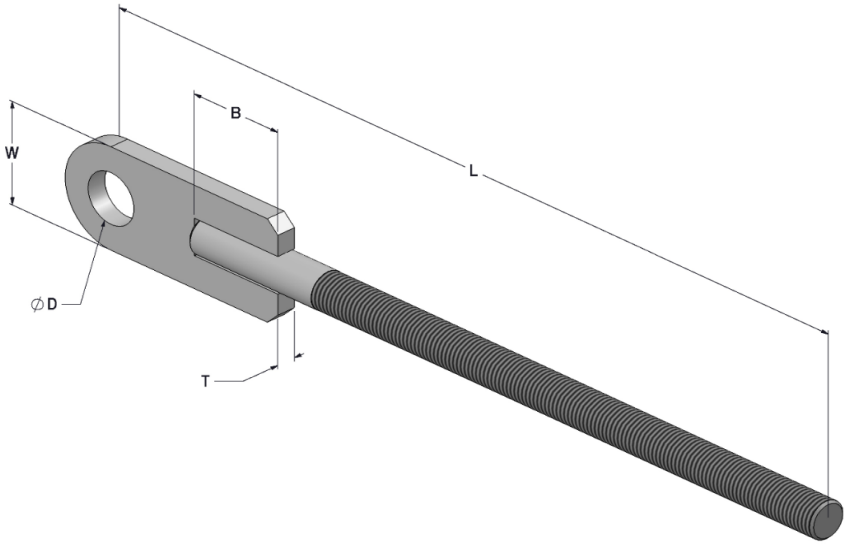

Rod Thread	Hole ø D	W	T
M10	14	25	6
M12	18	40	6
M16	22	50	8
M20	26	50	16
M24	32	75	16
M30	38	75	25
M36	46	100	25
M42	52	125	25
M48	60	150	25
M56	68	150	36
M64	76	200	32
M72	84	250	32
M80	94	275	40

NOTES	
Material	Carbon Steel Gr.250 or Stainless Steel Gr.316
Standard finish	Hot Dip Galvanised or Mill
	Right hand thread as standard with 150mm clean thread
	L dimension to be specified by client

ROD CONNECTOR: PRO-RC

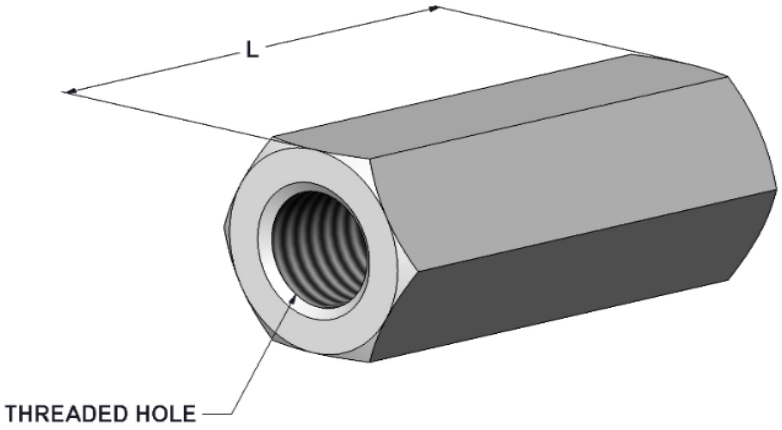

Rod Connector Thread Size	L
M6	25
M8	25
M10	40
M12	40
M16	40
M20	50
M24	50
M30	60
M36	70
M42	100
M48	120
M56	140

NOTES	
Material	Carbon Steel
Standard finish	Galvanised or Zinc Plated
Thread	Metric right hand as standard
	Additional sizes and lengths are available

FORGED CLEVIS AND PIN: PRO-FC

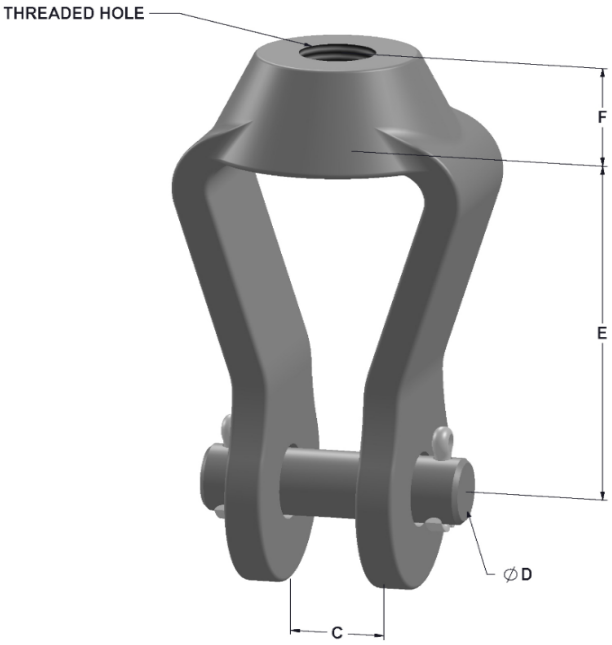

Thread	C	E	F	Load Pin ø D
mm	mm	mm	mm	mm
M10	16	90	16	10
M12	16	90	16	12
M16	16	90	16	16
M20	20	102	29	20
M24	24	129	32	24
M30	32	129	32	30
M36	38	152	38	36
M42	45	152	44	42
M48	65	178	57	48
M56	65	203	70	56
M64	69	229	76	64

NOTES	
Material	Clevis Forged Carbon Steel, Load Pin Carbon RB
Standard finish	Hot Dip Galvanised or Mill
Thread	Right hand thread standard

PROsupport
FORGED TURNBUCKLE: PRO-TB
LH/RH Thread

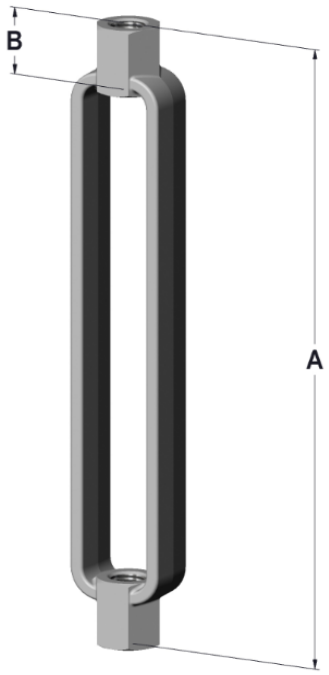

Thread	A	B
	mm	mm
M10	180	14
M12	192	20
M16	200	24
M20	206	27
M24	226	37
M30	232	40
M36	244	46
M42	280	64
M48	294	71
M56	320	84
M64	342	95

NOTES	
Material	Forged Carbon Steel
Standard finish	Hot Dip Galvanised or Mill
Thread	Right hand / Left hand thread standard

SPADE END CONNECTOR: PRO-SEC

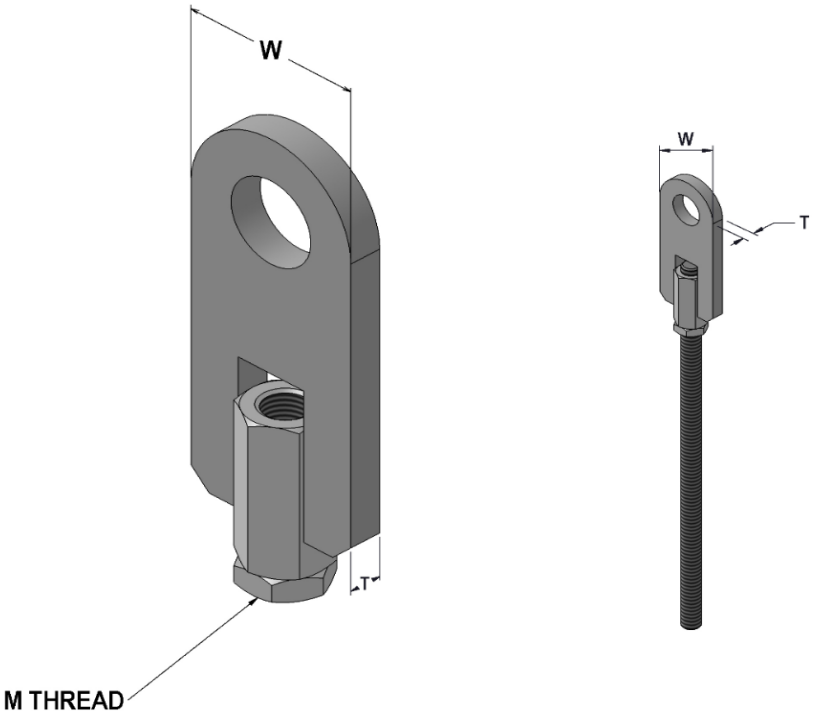

Spade End Connector Thread Size	W	T
M10	40	6
M12	40	6
M16	50	8
M20	50	16
M24	75	16
M30	75	25
M36	100	25
M42	125	25
M48	150	25
M56	150	36

NOTES	
Material	Carbon Steel
Standard finish	Galvanised or Zinc Plated
Thread	Metric right hand as standard
	Hanger Rod see PRO-AT or PRO-DR

SECTION K

U-BOLTS

STANDARD U-BOLT GUIDE: PRO-UBG P 68

STANDARD U-BOLT CLAMP: PRO-UBC P 69

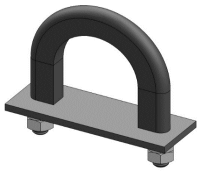

INSULATED U-BOLT CLAMP: PRO-IUC/ T1
For Stainless Steel, Duplex or Super Duplex P 70

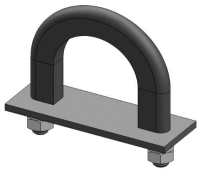

INSULATED U-BOLT CLAMP: PRO-IUC/ T2
For Copper Nickel Cu/Ni Pipes P 71

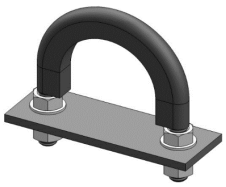

INSULATED U-BOLT GUIDE: PRO-IUG/ T1
For Stainless Steel,Duplex or Super Duplex P 72

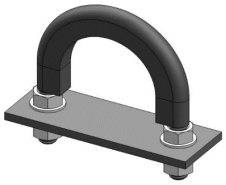

INSULATED U-BOLT GUIDE: PRO-IUG/ T2
For Copper Nickel Cu/Ni Pipes P 73

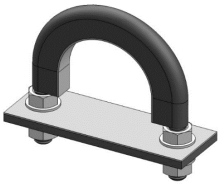

INSULATED U-BOLT GUIDE with Teflon: PRO-IUG/ T3
For Stainless Steel, Duplex or Super Duplex P 74

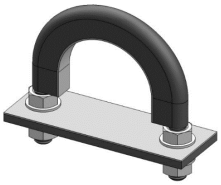

INSULATED U-BOLT GUIDE with Teflon: PRO-IUG/ T4
For Copper Nickel Cu/Ni Pipes P 75

STANDARD U-BOLT GUIDE: PRO-UBG

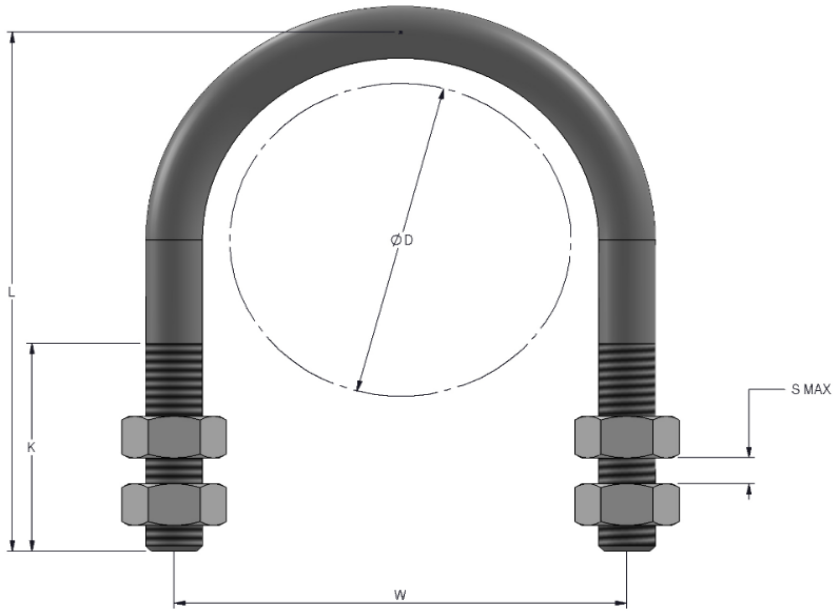

Pipe NB	Pipe ø D	Thread ø Metric	W	L	K	S/ Max
15	21.3	8	40	45	25	10
20	26.7	8	45	50	30	10
25	33.4	8	50	60	30	10
32	42.2	8	60	70	30	10
40	48.3	10	65	85	40	16
50	60.3	10	80	80	40	16
65	76	12	95	120	50	19
80	88.9	16	110	140	55	19
100	114.3	16	140	165	55	19
125	141.3	16	165	190	55	19
150	168.3	20	195	225	65	19
200	219.1	20	250	275	65	19
250	273	20	305	335	75	22
300	323.9	24	355	385	75	22
350	355.6	24	390	425	80	22
400	406.4	24	440	475	80	22
450	457.2	24	495	525	80	22
500	508	24	454	575	80	22
600	609.6	24	645	675	80	22

NOTES	
Material	Carbon Steel Gr.4.6 or Stainless Steel Gr.316
Standard finish	Hot Dip Galvanised for Carbon Steel
	U bolts supplied with 4 nuts

STANDARD U-BOLT CLAMP: PRO-UBC

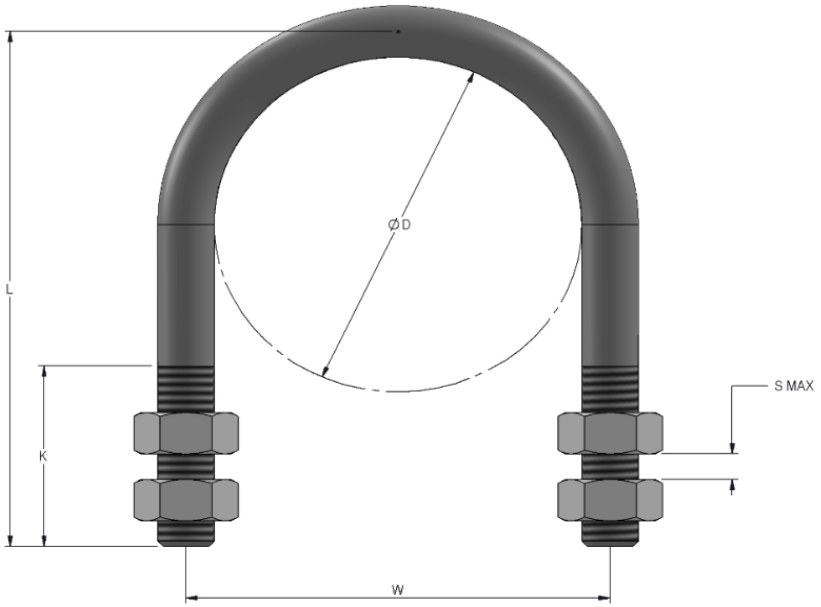

Pipe NB	Pipe ø D	Thread ø Metric	W	L	K	Max Material Thick S
15	21.3	8	30	50	25	7
20	26.7	8	35	60	25	10
25	33.4	8	45	65	25	10
32	42.2	8	55	75	25	10
40	48.3	10	60	90	35	16
50	60.3	10	75	100	35	16
65	76.1	12	90	130	45	16
80	88.9	16	105	150	50	19
100	114.3	16	135	175	50	19
125	141.3	16	160	200	50	19
150	168.3	20	190	235	55	19
200	219.1	20	245	295	55	19
250	273	20	300	350	60	22
300	323.9	24	350	400	60	22
350	355.6	24	385	440	65	22
400	406.4	24	435	500	65	22
450	457.2	24	485	540	70	22
500	508	24	540	600	70	22
600	609.6	24	640	700	70	22
650	660.4	24	690	740	70	24
700	711.2	30	750	810	80	24
750	762	30	800	860	80	24

NOTES	
Material	Carbon Steel Gr.4.6 or Stainless Steel Gr.316
Standard finish	Hot Dip Galvanised for Carbon Steel
	U bolts supplied with 4 nuts

PROsupport

INSULATED U-BOLT CLAMP: PRO-IUC/ T1

For Stainless Steel, Duplex or Super Duplex pipes

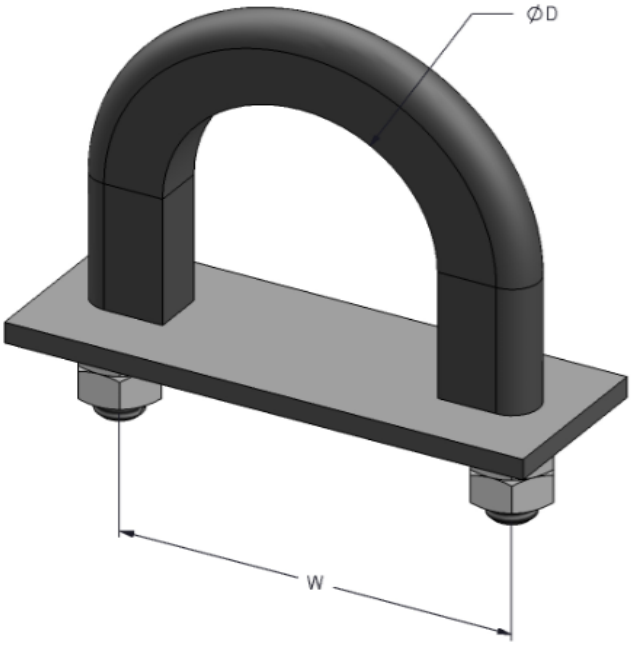

Pipe NB	Pipe OD	THREAD SIZE	ø D	W
15	21.3	M6	21	37
20	26.9	M6	27	43
25	33.7	M6	35	51
32	42.4	M10	43	69
40	48.3	M10	49	75
50	60.3	M10	61	87
65	76.1	M12	76	102
80	88.9	M12	89	115
100	114.3	M12	115	141
150	168.3	M16	168	210
200	219.1	M16	220	262
250	273	M16	273	315
300	323.9	M16	325	366
350	355.6	M16	357	399

NOTES	
Material	Carbon Gr.4.6 or Stainless Steel Gr.316
Base Material	10mm Thick Cork/Neoprene Composite
Insulator	Neoprene compound with self-extinguishing fire retardant
Standard finish	Hot Dip Galvanised for Carbon Steel. Mill for Stainless Steel
	Temperature range -35°C to 100°C

PROsupport

INSULATED U-BOLT CLAMP: PRO-IUC/ T2

For Copper Nickle Cu/Ni Pipes

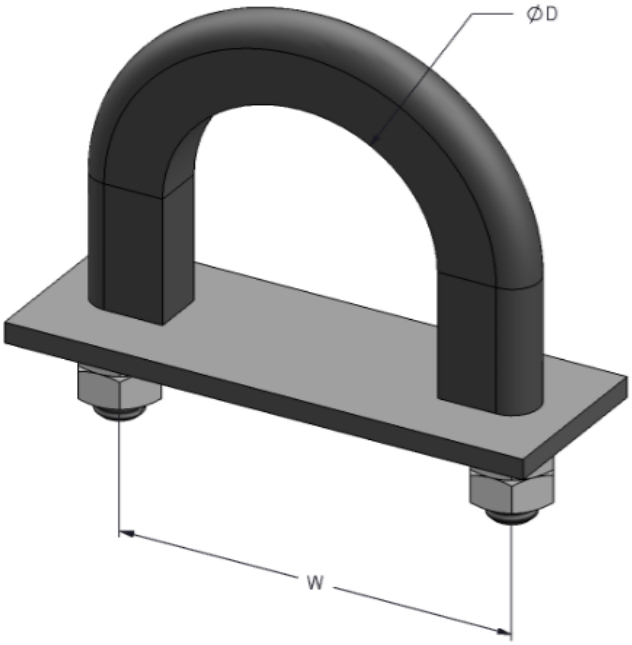

Pipe NB	Pipe OD	THREAD SIZE	ø D	W
10	16	M6	16	32
20	25	M6	25	41
25	30	M6	30	46
32	38	M10	38	64
40	44.5	M10	45	71
50	57	M10	57	83
65	76.1	M12	76	102
80	88.9	M12	89	115
100	108	M12	108	134
150	159	M16	159	201
200	219.1	M16	220	262
250	267	M16	268	310
300	323.9	M16	324	366
350	368	M16	369	411

NOTES	
Material	Carbon Gr.4.6 or Stainless Steel Gr.316
Base Material	10mm Thick Cork/Neoprene Composite
Insulator	Neoprene compound with self-extinguishing fire retardant
Standard finish	Hot Dip Galvanised for Carbon Steel. Mill for Stainless Steel
	Temperature range -35°C to 100°C

PROsupport

INSULATED U-BOLT GUIDE: PRO-IUG/ T1

For Stainless Steel, Duplex & Duper Duplex

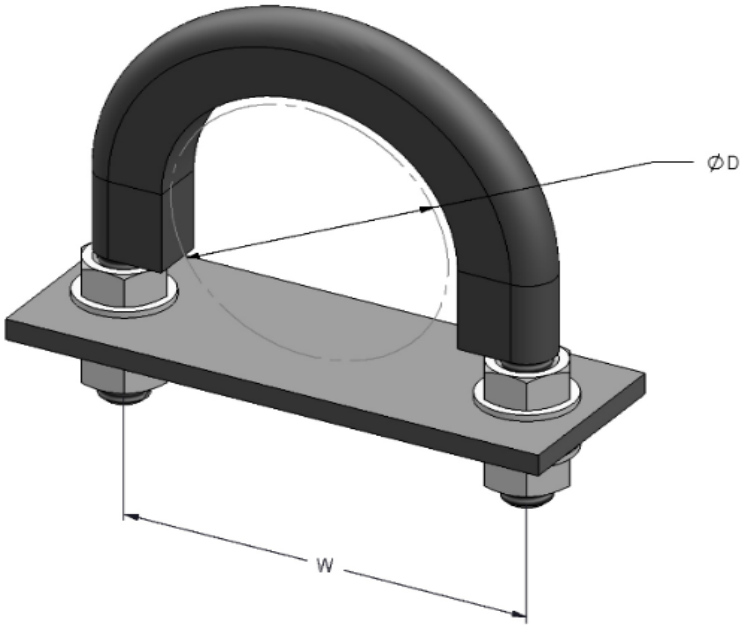

Pipe NB	Pipe OD	THREAD SIZE	ø D	W
15	21.3	M6	23	37
20	26.9	M6	29	43
25	33.7	M6	37	51
32	42.4	M10	46	69
40	48.3	M10	52	75
50	60.3	M10	64	87
65	76.1	M12	79	102
80	88.9	M12	92	115
100	114.3	M12	118	141
150	168.3	M16	172	210
200	219.1	M16	224	262
250	273	M16	276	315
300	323.9	M16	328	366
350	355.6	M16	361	399

NOTES	
Material	Carbon Gr.4.6 or Stainless Steel Gr.316
Base Material	10mm Thick Cork/Neoprene Composite
Insulator	Neoprene compound with self-extinguishing fire retardant
Standard finish	Hot Dip Galvanised for Carbon Steel. Mill for Stainless Steel
	Temperature range -35°C to 100°C

PROsupport

INSULATED U-BOLT GUIDE: PRO-IUG/ T2

For Copper Nickle Cu/Ni Pipe

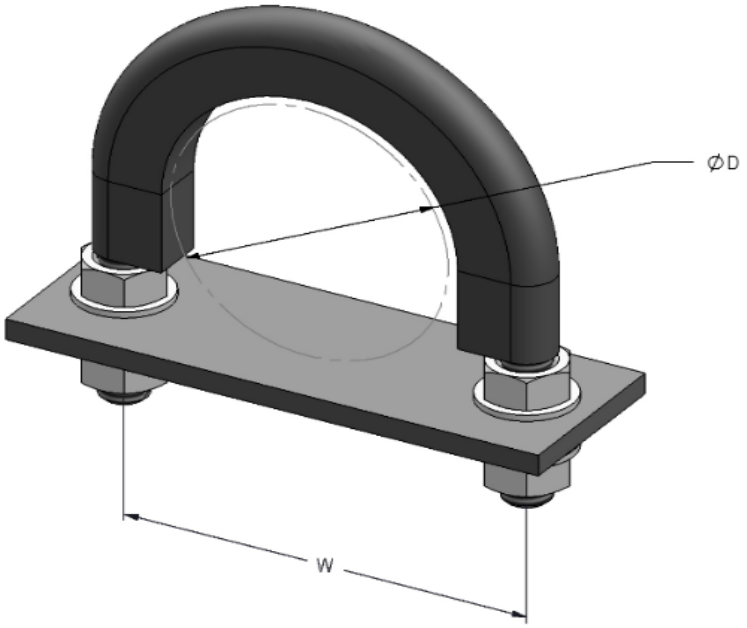

Pipe NB	Pipe OD	THREAD SIZE	ø D	W
10	16	M6	18	322
20	25	M6	27	41
25	30	M6	32	46
32	38	M10	41	64
40	44.5	M10	48	71
50	57	M10	60	83
65	76.1	M12	80	102
80	88.9	M12	93	115
100	108	M12	112	134
150	159	M16	163	201
200	219.1	M16	224	262
250	267	M16	272	310
300	323.9	M16	328	366
350	368	M16	373	411

NOTES	
Material	Carbon Gr.4.6 or Stainless Steel Gr.316
Base Material	10mm Thick Cork/Neoprene Composite
Insulator	Neoprene compound with self-extinguishing fire retardant
Standard finish	Hot Dip Galvanised for Carbon Steel. Mill for Stainless Steel
	Temperature range -35°C to 100°C

PROsupport

INSULATED U-BOLT GUIDE with Teflon: PRO-IUG/ T3

For Stainless Steel, Duplex, Super Duplex Pipes

PROLEUM
FORWARD THINKING SOLUTIONS

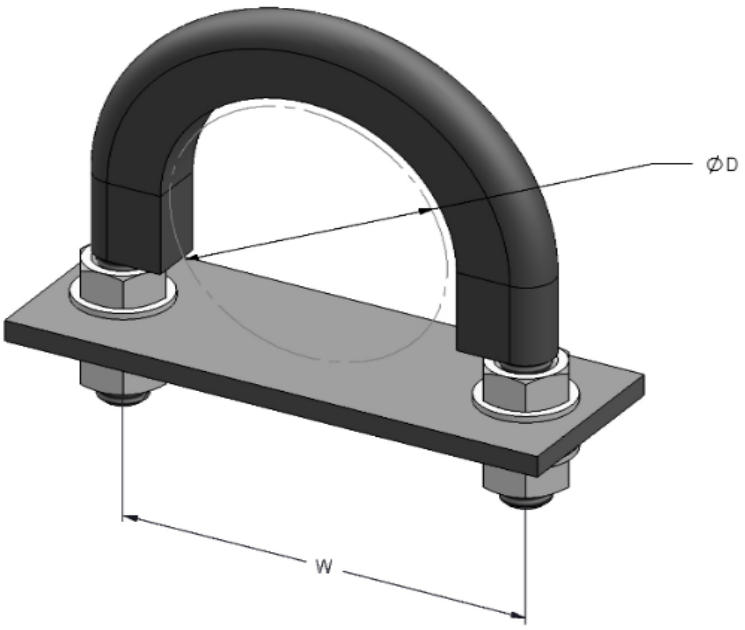

Pipe NB	Pipe OD	THREAD SIZE	ø D	W
15	21.3	M6	23	37
20	26.9	M6	29	43
25	33.7	M6	37	51
32	42.4	M10	46	69
40	48.3	M10	52	75
50	60.3	M10	64	87
65	76.1	M12	79	102
80	88.9	M12	92	115
100	114.3	M12	118	141
150	168.3	M16	172	210
200	219.1	M16	224	262
250	273	M16	276	315
300	323.9	M16	328	366
350	355.6	M16	361	399

NOTES	
Material	Carbon Gr.4.6 or Stainless Steel Gr.316
Base Material	10mm Thick Cork/Neoprene Composite
Insulator	Neoprene compound with self-extinguishing fire retardant
	1mm Teflon Bonded to Base and Insulator
Standard finish	Hot Dip Galvanised for Carbon Steel. Mill for Stainless Steel
	Temperature range -35°C to 100°C

PROsupport

INSULATED U-BOLT GUIDE with Teflon: PRO-IUG/ T4

For Copper Nickle Cu/Ni Pipes

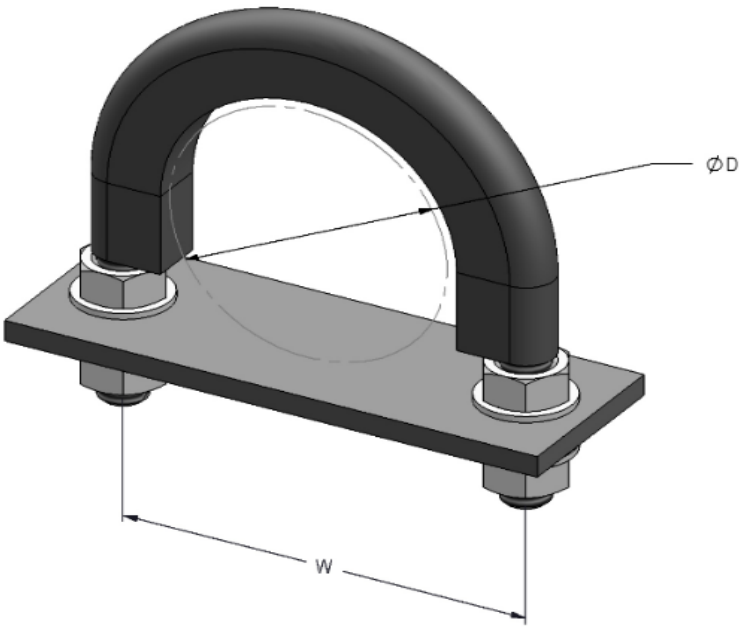

Pipe NB	Pipe OD	THREAD SIZE	ø D	W
10	16	M6	18	322
20	25	M6	27	41
25	30	M6	32	46
32	38	M10	41	64
40	44.5	M10	48	71
50	57	M10	60	83
65	76.1	M12	80	102
80	88.9	M12	93	115
100	108	M12	112	134
150	159	M16	163	201
200	219.1	M16	224	262
250	267	M16	272	310
300	323.9	M16	328	366
350	368	M16	373	411

NOTES	
Material	Carbon Gr.4.6 or Stainless Steel Gr.316
Base Material	10mm Thick Cork/Neoprene Composite
Insulator	Neoprene compound with self-extinguishing fire retardant
	1mm Teflon Bonded to Base and Insulator
Standard finish	Hot Dip Galvanised for Carbon Steel. Mill for Stainless Steel
	Temperature range -35°C to 100°C

SECTION L

CPS SERIES CRYOGENIC PIPE SHOES AND TRUNNION SUPPORTS

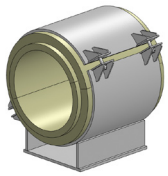

CRYOGENIC PIPE SHOE TYPE 1: PRO-CPS/ T1 P 79

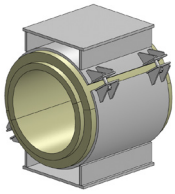

CRYOGENIC PIPE SHOE TYPE 1: PRO-CPS/ T2 P 79

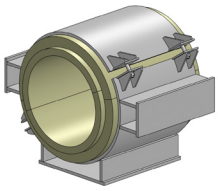

CRYOGENIC PIPE SHOE TYPE 1: PRO-CPS/ T3 P 79

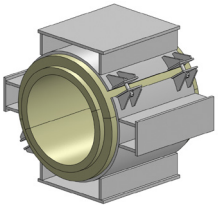

CRYOGENIC PIPE SHOE TYPE 1: PRO-CPS/ T4 P 79

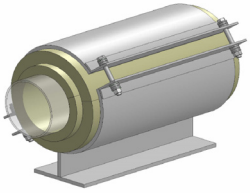

CRYOGENIC PIPE SHOE TYPE 1: PRO-CPS/ T5 P 79

STANDARD COLD SHOE: PRO-CS
For un-insulated pipe P 80

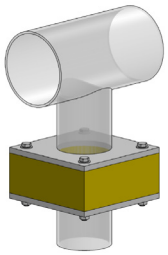

INSULATED TRUNNION SUPPORT: PRO-IT P 81

INTRODUCTION

General Notes

The PRO-CPS series comes with a choice of insulation types to suit on site requirements, Kingspan Tarec M1-CR 45 (CFC/HCFC Free Rigid Polyisocyanurate Insulation) or Pittsburgh Corning Foamglass.

Total insulation thickness is determined by the required operating temperature and to be confirmed by client.
All Vapour barrier, tape, adhesives, mastic and joint sealer are supplied with the pipe shoe

Tarecpir™ high performance process insulation offers the most comprehensive range of preformed insulation system and ancillary products for the cryogenic, low and dual temperature applications in the LNG, Petrochemical and Process Industries and is suitable for a wide spectrum of other applications.

TECHNICAL DATA SHEET

Tarec pir™ HD 160

CFC/HCFC Free Rigid Polyisocyanurate Insulation

MATERIAL PROPERTY	TEST METHOD	UNIT	TYPICAL VALUE
Nominal Density	EN ISO 845	kg/m^3	≥ 160
Thermal Conductivity	EN 12667 at +10°C Initial Aged (25 weeks @ 70°C)	 W/m·K W/m·K	 0.034 0.039
Colour			Green
Closed Cell Content	EN ISO 4590 Meth. 1	%	≥ 95
Operating Temperature Limits	Upper Limit Lower Limit	°C °C	+120 -200
Compressive Strength	EN 826 at +23°C Parallel Perpendicular	 kPa kPa	 ≥ 1900 ≥ 1650
Tensile Strength	ASTMD D 1623 - Spec. A at +23°C Parallel Perpendicular	 kPa kPa	 ≥ 1750 ≥ 1550
Linear Dimensional Stability	EN 1604 +93°C for 24 hours -30°C for 24 hours +70°C and 95°C RH for 48 hours	 % % %	 ≤ 1 ≤ 1 ≤ 3
Friability	ASTM C 421 (10min.)	%	≤ 10
Linear Expansion Coefficient	ASTM D 696	K^{-1}	$40\text{-}70 \times 10^{-6}$
Water Absorption	ISO 2896	Vol %	≤ 5.0

FIRE PROPERTIES	TEST METHOD	TYPICAL RESULT
Horizontal Burning	EN ISO 3582	≤ 20mm
Temperature Index	EN ISO 4589-3	> 390°C
Vertical Burning	DIN 4102-1	B2

FOAMGLAS® ONE™ insulation is a lightweight, rigid material composed of millions of completely sealed glass cells. It is manufactured by Pittsburgh Corning in a block form and then fabricated into a wide range of shapes and sizes to satisfy industrial and commercial insulation requirements.

PHYSICAL AND THERMAL PROPERTIES[2,3]			
Property	ASTM Method	SI	English
Absorption of moisture	C240	< 0.2% by Vol	< 0.2% by Vol
Capillarity		None	
Chemical Resistance		Impervious to common acids and their fumes.	
Coefficient of Linear Thermal Expansion	E228	25 to 300°C , 9.0 x 10^{-6} / K -170 to 25°C , 6.6 x 10^{-6} / K	75 to 575°F , 5.0 x 10^{-6} / °F -274 to 75°F , 3.7 x 10^{-6} / °F
Combustibility	E136	Noncombustible	
Composition		Soda lime glass. Inorganic. No fibers or binders.	
Compressive Strength	C165 / C240 / C552	AVG = 620 kPA LSL = 414 kPA	AVG = 90 lb / in^2 LSL = 60 lb / in^2
Corrosion, Water Soluble Ions and PH	C871 C692 C1617	Acceptable for use with Stainless Steel Pass (0 Coupon Cracked) < DI Water	
Density (+/-10%)	C303	115 kg / m^3	7.18 lb / ft^3
Dimensional Stability		Excellent - does not shrink or swell.	
Flexural Strength	C203 / C240	AVG = 480 kPA LSL = 283 kPA	AVG = 70 lb / in^2 LSL = 41 lb / in^2
Hygroscopicity		No increase in weight in 90% relative humidity.	
Modulus of elasticity, Approximate (v= 0.25)	C623	900 MPa	1.3 x 10^5 lb·in^{-2}
Service Temperature		-268 to 482°C	-450 to 900°F
Specific Heat	E1461	0.77 kJ / kg·K @ 25°C	0.18 BTU / lb·°F @ 77°F
Surface Burning Characteristics	E84	Flame Spread Index 0 / Smoke Development Index 0.	
Water Vapour Permeability	E96 Wet Cup	0.00 ng / Pa·s·m	0.00 perm·inch

THERMAL CONDUCTIVITY (λ) VALUES AT SELECT TEMPERATURE (ASTM C518, C177)														
Temperature	°C (°F)	204 (400)	149 (300)	93 (200)	38 (100)	24 (75)	10 (50)	-18 (0)	-46 (-50)	-73 (-100)	-101 (-150)	-129 (-200)	-157 (-250)	-165 (-265)
ASTM C552[3]	W/m k (BTU in/hr °F ft^2)	0.084 (0.58)	0.069 (0.48)	0.058 (0.40)	0.048 (0.33)	0.045 (0.31)	0.043 (0.30)	0.039 (0.27)	0.035 (0.24)	0.030 (0.21)	0.027 (0.19)	0.025 (0.17)	0.023 (0.16)	N/A
FOAMGLAS ONE™ Insulation	W/m k (BTU in/hr °F ft^2)	0.078 (0.54)	0.065 (0.45)	0.054 (0.38)	0.044 (0.31)	0.042 (0.29)	0.040 (0.28)	0.036 (0.25)	0.032 (0.22)	0.029 (0.20)	0.026 (0.18)	0.023 (0.16)	0.020 (0.14)	0.019 (0.13)

Cryogenic Pipe Shoe PRO-CPS Series Construction/Manufacture:

The Pro 600 series are fabricated from carbon steel and hot dip galvanised, to sizes determined by the required insulation thickness as specified in the line data or isometric drawing. Once the pipe size and the outside diameter of the insulation has been issued fabrication drawing will be created. Each support is wrapped in moisture proof plastic and created for the protection against mechanical and moisture damage.

It is recommended during installation the pipe support insulation is protected from the elements including all moisture and direct sunlight, and should be sealed and preserved whilst waiting for the line insulation to be installed.

Recommended field installation instructions are available on request.

PRO-SP Teflon slide plates are recommended for shoe sizes above 600NB.

Alternative corrosion protection finishes are available.

PROLEUM
FORWARD THINKING SOLUTIONS

PRO-CPS/ T1

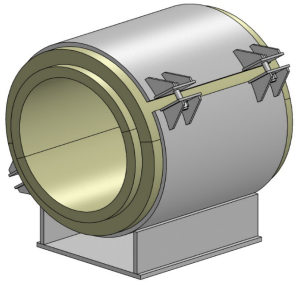

The standard **PRO-CPS/ T1** Insulated Pipe Shoe is fitted with disc springs and washers to ensure the cradle is adequately clamped during operational shrinkage.

A PTFE Slide plate is recommended for larger diameter pipe supports to reduce the sliding resistance to ensure the integrity of the insulation.

The PRO-CPS Series is designed for pipe sizes greater than 100NB for pipe sizes less that 100NB, see PRO-CPS/ T5

PRO-CPS/ T2

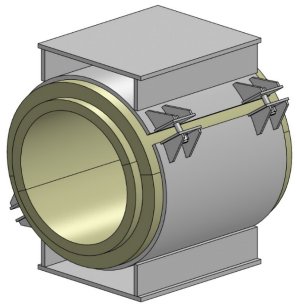

The **PRO-CPS/ T2** has the same characteristics as the PRO-CPS/ T1 except it has an extra base attachment on the top cradle to prevent line lifting during operation.

For smaller uplift forces a PRO-CPS/ T1 can be used with shoe hold down guides installed insitu. Calculations may need to be carried out.

PRO-CPS/ T3

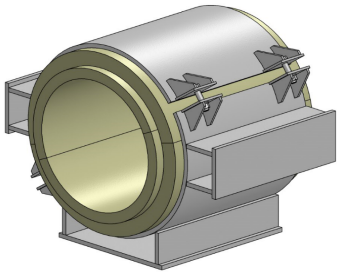

The **PRO-CPS/ T3** has the same characteristics as the PRO-CPS/ T1 except it has base attachments on each side to prevent lateral forces.

For smaller lateral forces a PRO-CPS/ T1 can be used with shoe guides installed insitu.

Calculations may need to be carried out.

PRO-CPS/ T4

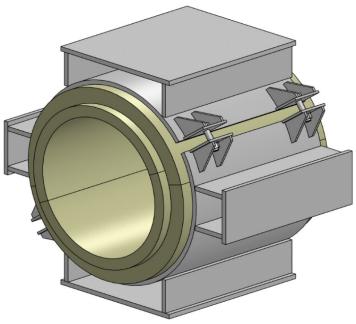

The **PRO-CPS/ T4** is the combination of the PRO-CPS/ T2 and CPS/ T3 with attachments restraining uplift and lateral forces.

For lighter forces a PRO-CPS/ T1 can be installed with shoe guides installed insitu.

PRO-CP/ T5

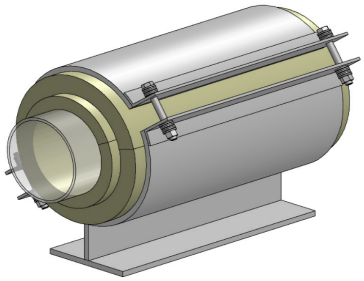

PRO-CPS/ T5 fabricated to client's specifications.

STANDARD COLD SHOE: PRO-CS

For un-insulated pipe

PROLEUM
FORWARD THINKING SOLUTIONS

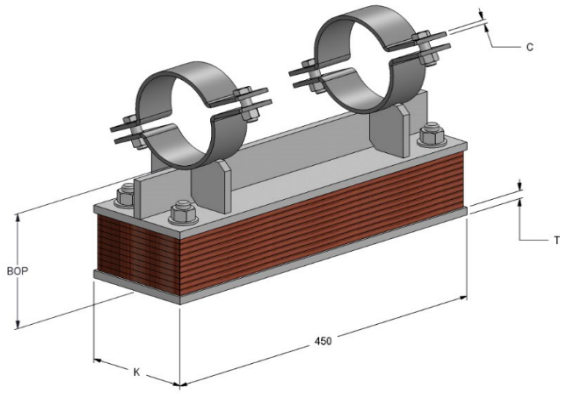

PRO-CS/ T1 For line sizes up to 150NB

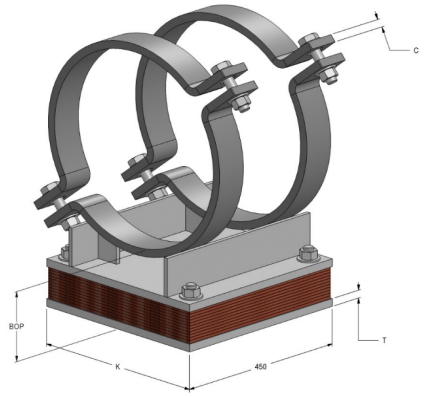

PRO-CS/ T2 For line sizes 200NB to 1050NB

PRO-CS. DIMENSIONAL DETAILS						
Nominal Pipe Size	BOP	K	Clamp Thickness C	Base Plate Thickness T	Clamp Bolt Size	Type
mm	mm	mm	mm	mm	mm	T1
25	150	135	5	10	M8	
40	150	135	5	10	M8	
50	150	135	8	10	M12	
80	150	135	8	10	M12	
100	150	135	10	10	M16	
150	150	135	10	10	M20	
200	200	200	10	10	M20	T2
250	200	200	16	16	M24	
300	200	320	16	16	M24	
350	200	320	16	16	M24	
400	200	370	16	16	M24	
450	200	400	20	20	M30	
500	200	450	20	20	M30	
600	200	550	20	20	M30	
650	200	550	20	20	M42	
700	200	550	20	20	M42	
750	200	550	20	20	M42	
800	200	550	25	20	M48	
850	200	650	25	20	M48	
900	200	650	25	25	M48	
950	200	650	25	25	M56	
1000	200	650	25	25	M56	
1050	200	750	25	25	M56	

NOTES	
Material	Upper shoe and clamp arrangement Stainless Steel 316
	Insulation block compressed laminated wood marine varnished or Micarta Block
	Base plate Carbon Steel Gr.250
Standard finish	SS is pickled and passivated. Base plate Hot Dip Galvanised
	Standard Insulation Block thickness range from 50mm to 100mm

INSULATED TRUNNION SUPPORT: PRO-IT

PROLEUM
FORWARD THINKING SOLUTIONS

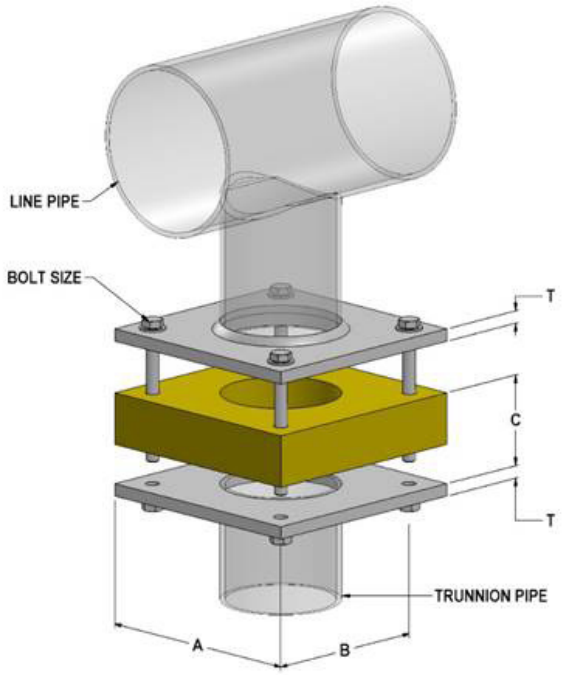

						MAX LOADS		
Trunnion Pipe Size	Base Plate A	Plate Thicknes	Hole Centres B	Bolt Size	Insulation Thickness C	Micarta -270C to +130C	Parmali -200C to +90C	Lignostone -196C to +90C
NB	mm	mm	mm	mm	mm			
50 to 80	200	12	140	M12	100			
100 to 150	220	12	160	M12	100			
200 to 250	320	12	260	M16	150			
300 to 350	420	12	360	M16	150			
400 to 450	520	12	460	M16	150			
500 to 550	620	16	560	M20	150			
600 to 650	720	20	660	M20	150			
700 to 750	820	20	760	M24	150			
800 to 900	980	20	920	M24	150			

NOTES	
Material	To suit trunnion material specified by client. Standard supply Stainless Steel 316 Mill finish.
	Trunnion pipe not included in supply unless otherwise requested
	Bolting - ASTM – A 193 B8M Class 1

SECTION M

VARIABLE SPRING SUPPORTS

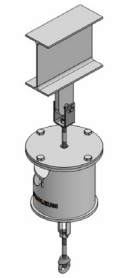
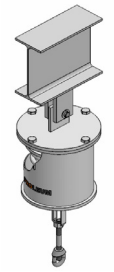
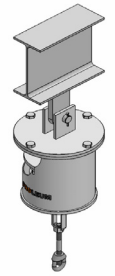

P 84

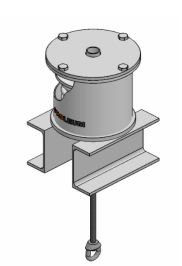
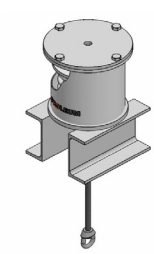
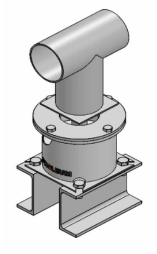

P 84

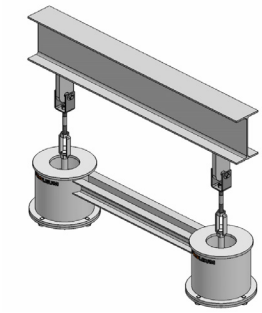

P 84

VARIABLE LOAD SPRING SUPPORTS

PROLEUM engineer and manufacture a full range of variable spring supports to client specification and requirements.

GENERAL

Variable load spring supports are used for supporting pipe work connecting to vessels, columns, and large tanks, that are subject to thermal movement and/or subsidence.

They are used when it is not possible to use rigid hangers or constant load spring supports. Supports can be manufactured with variable movement capacity from 35mm up to 210mm

This full travel may be used provided the necessary engineering is carried out to ensure that the pipe work and nozzle connections can withstand the loads.

STANDARD DESIGN

All units are easily adjusted, Types A, B, C, and G being supplied with a Turnbuckle built into the unit. Type F, H and K units use a threaded load tube. Carbon steel construction finished in Hot Dip Galvanised to ASTM A153. Ideally suited for highly corrosive environments such as Offshore and Refineries. Scale plate SS fitted with a Hot Operating (Red) and Cold Pre-Set Cold Preload indicators.

Compact design saving headroom, this is particularly important in Offshore applications where space is a premium. Load indicator visible from both sides of the unit. All units are supplied as standard with Pre-Set travel stops locking the unit in the cold position.

Low maintenance design. For offshore or highly corrosive environments, the units are available to be coated with alternate paint systems.

PROLEUM Spring Supports conform to the requirements of the following international specifications:
- British Standard BS 3974.
- MSS SP 58.
- ASME B31.1
- ASME B31.3

HOW TO ORDER

Specify size, type, operating load, calculated travel displacement. Specify any non-standard requirements.

VARIABLE SPRING SUPPORT

PROLEUM
FORWARD THINKING SOLUTIONS

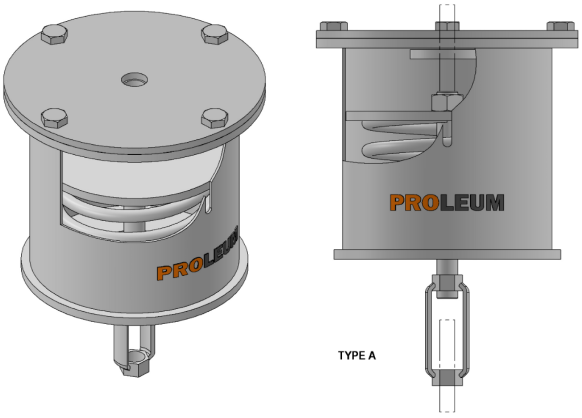

TYPE A

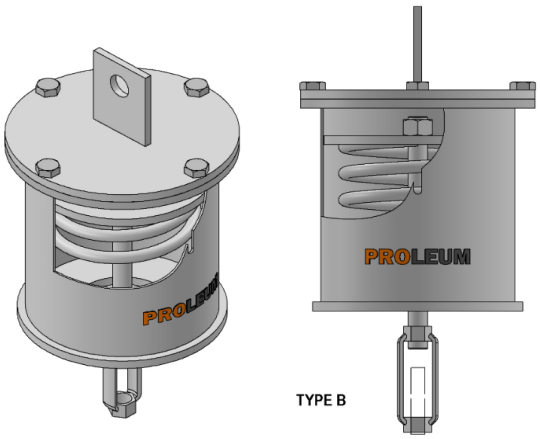

TYPE B

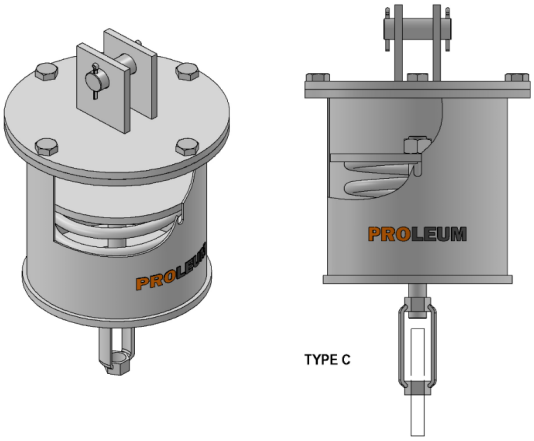

TYPE C

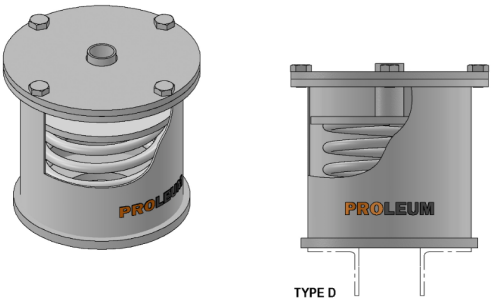

TYPE D

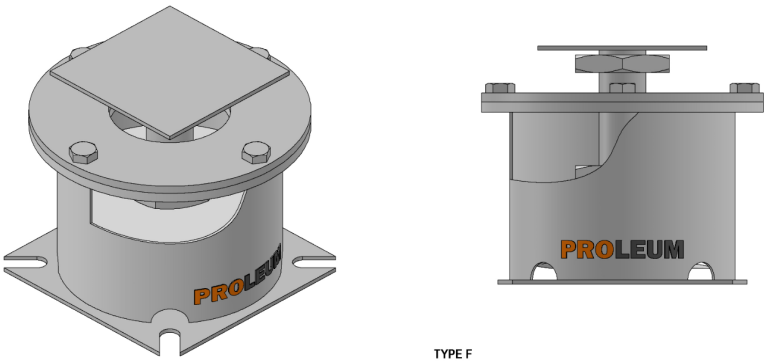

TYPE F

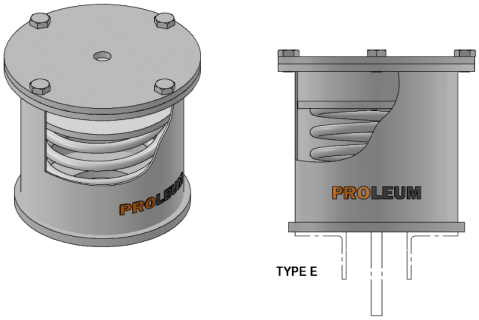

TYPE E

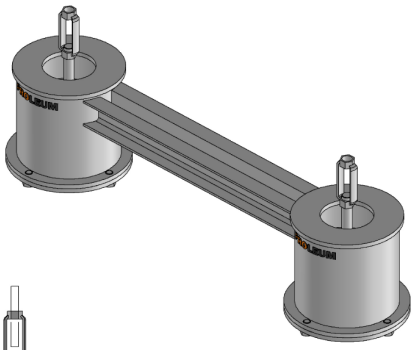

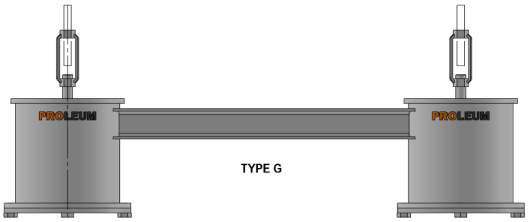

TYPE G

MINPROVISE

FORWARD THINKING PARTNERS

PROLEUM is a wholly owned subsidiary of **MINPROVISE International Pty Ltd,** an Australian owned and operated company specialising in integrated services for the oil and gas, energy and resources markets.

CONTACT US

HEAD OFFICE &
MAIN FACILITY:

13A Stott Road
Welshpool WA 6106
Australia

P: +61 8 9359 6800
E: sales@minprovise.com.au Website: www.minprovise.com.au

QUEENSLAND
REGIONAL OFFICE:

Office 30, 1048 Beaudesert Road
Coopers Plains QLD 4108
Australia

P: +61 7 3255 5919
E: eastern.admin@minprovise.com.au

KARRATHA
REGIONAL WORKSHOP:

107 Exploration Drive
Gap Ridge, Karratha WA 6714
Australia

P: +61 7 3255 5919
E: eastern.admin@minprovise.com.au

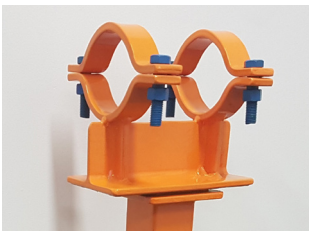

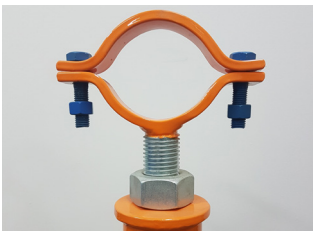

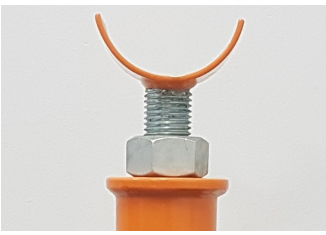

MANAGEMENT SYSTEM CERTIFICATION
DNV·GL
ISO 9001 = ISO 14001
AS/NZS 4801 = OHSAS 18001